Considerations for the Conversion of a Pulverized Coal Boiler to Fire Biomass in Suspension

U.S. DEPARTMENT OF ENERGY: BIOMASS 2011

National Harbor, MD 7/26/2011

Phil McKenzie
Bus Dev Mgr Biomass Projects

The Big Picture

Key decisions for biomass utilization in PC-fired boilers:

- How much, how often, what kinds of fuel

Fuel preparation requirements:

- Essential but different for wood vs herbaceous forms
- On-site vs off-site fuel preparation

Biomass supply to boiler:

- Through existing pulverizers - capacity, primary air
- Separate prep/pneumatic transport – dust, pellets, shredded grasses

Burner design drivers:

- Fuel type, input, quantity of burners, location
- Primary/secondary air ratios, staging

Emissions:

- Actual emissions depend on fuel, system design, OFA; CO, UBC …
- Impacts on AQCS equipment

© 2011 Babcock & Wilcox Power Generation Group, Inc. All rights reserved.

It All Starts With the Fuel

© 2011 Babcock & Wilcox Power Generation Group, Inc. All rights reserved.

Fuels Characteristics

Fuel		Mahoning 7	Wood Pellets	Torrefied Wood
Proximate (as rec'd)				
Moisture—Total	%	6.17	6.03	15.95
Volatile Matter	%	33.42	75.18	38.99
Fixed Carbon	%	54.33	18.34	37.16
Ash	%	6.08	0.45	7.90
SUM	%	100	100	
Higher Heating Value	Btu/lb	13,149	8,451	8,812
FC/VM		1.63	0.24	1.83
Ultimate Analysis (A.R.)				
Carbon	%	74.2	47.27	55.06
Hydrogen	%	5.14	5.82	3.57
Nitrogen%	%	1.57	0.05	1.05
Sulfur	%	0.99	0.01	0.03
Moisture—Total	%	6.17	6.03	
Ash	%	6.08	0.45	7.90
Oxygen	%	5.85	40.36	16.44
Chlorine	%			
SUM	%	100	99.99	
HGI		49	18-28	>40

Dry wood pellets drive boiler performance similar to PRB coal

© 2011 Babcock & Wilcox Power Generation Group, Inc. All rights reserved.

Slagging, Fouling & Corrosion

- ***Biomass fuels*** generally exhibit low to very low mineral matter
- ***Pellets or chips*** from soft wood are benign but inclusion of bark adds to ash content and sometimes chlorine

- ***Agricultural materials*** often cause or contribute to slagging/fouling problems and corrosion
- ***Straw, grasses*** may have high alkali and chlorine content which, at higher input rates, can cause serious deposition and corrosion problems in SH's

© 2011 Babcock & Wilcox Power Generation Group, Inc. All rights reserved.

Combustion Technology

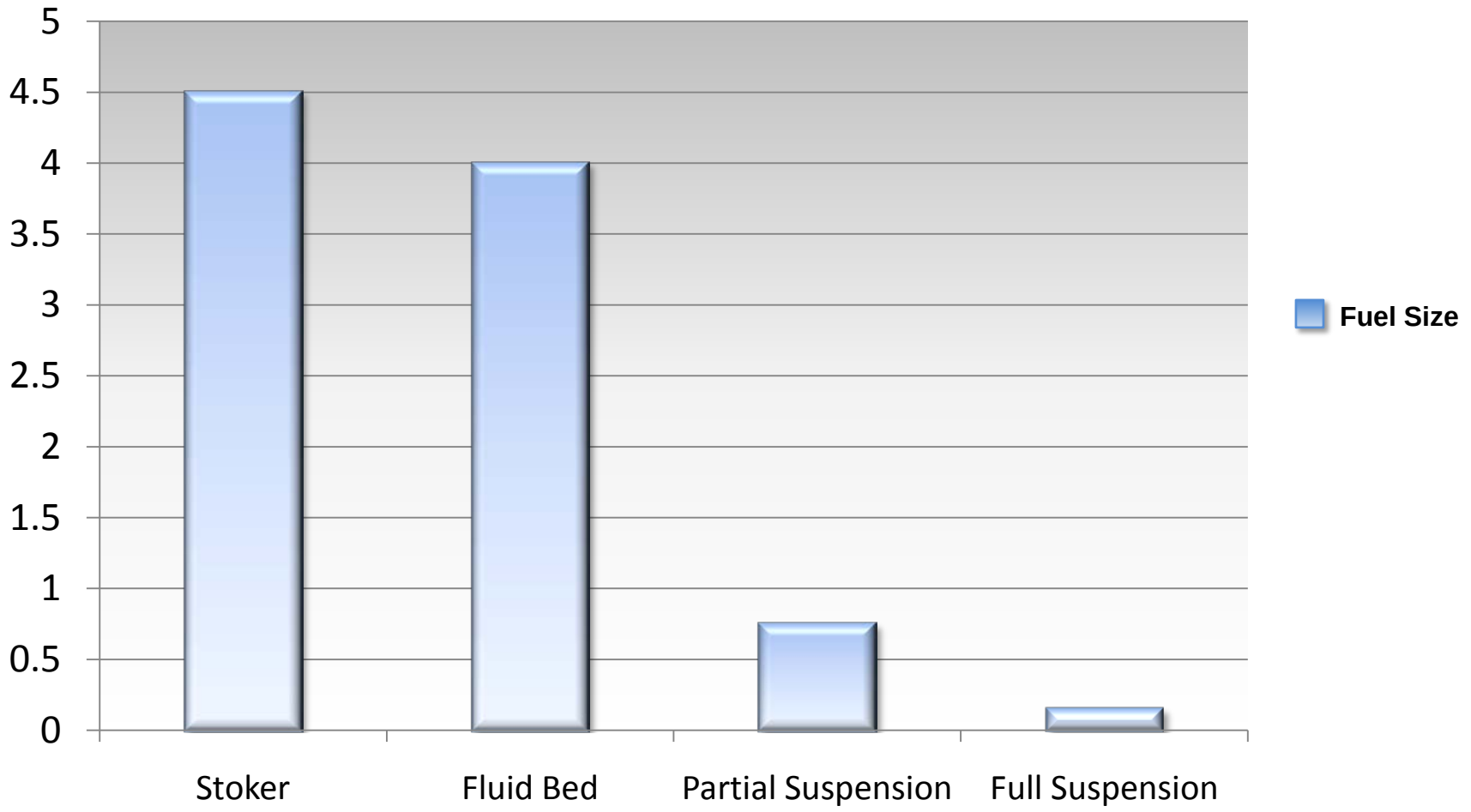

© 2011 Babcock & Wilcox Power Generation Group, Inc. All rights reserved.

Fuel Sizing for Suspension Firing

Fuel size drives the combustion process primarily *residence time*.

1.0 – 1.5 sec. from upper burners to furnace arch

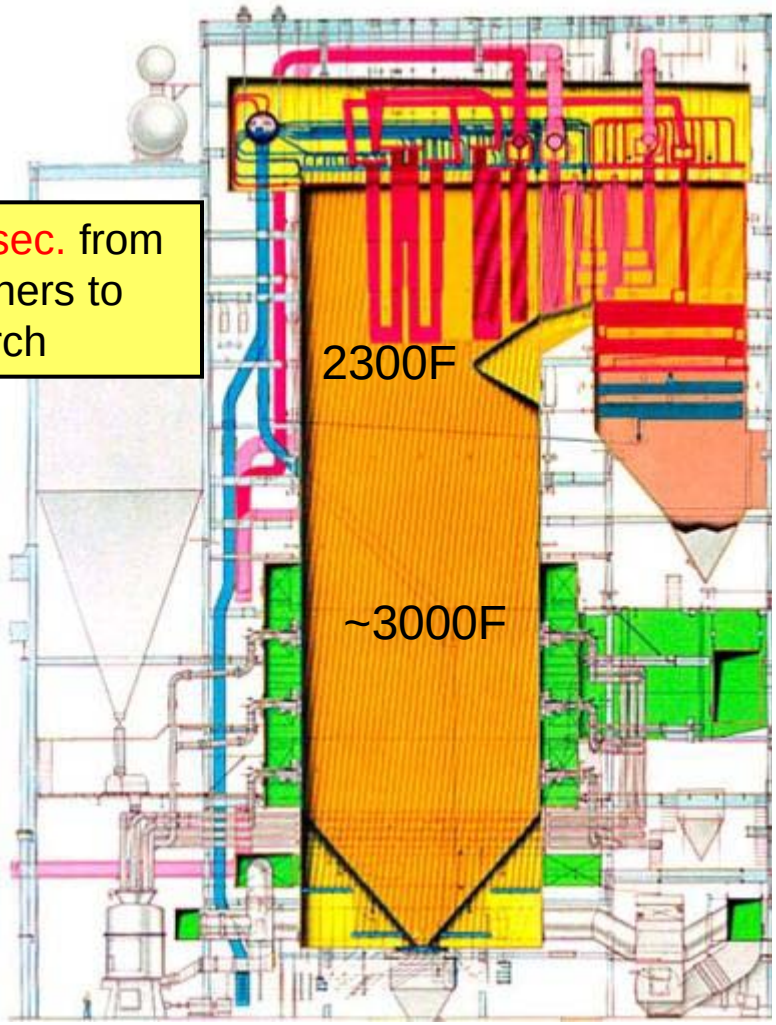

- Longer furnace residence times enable larger sized biomass (cyclones, stokers, fluid bed)
- Short residence times (PC suspension firing) necessitate small particle size for efficient combustion

© 2011 Babcock & Wilcox Power Generation Group, Inc. All rights reserved.

Suspension Firing

Differentiating Fuels:

- Grasses: Grasses, straw, other thin vegetable matter
- Woody: Wood, bark, other more dense types

Suspension Firing Requires Small Particles:

- Recommended particle size for wood ~1/16”
- Recommended size for grasses < 2” x 0

Larger Particles Require more Residence Time:

- Live with high unburned combustibles
- Add dump grate stoker in furnace hopper

© 2011 Babcock & Wilcox Power Generation Group, Inc. All rights reserved.

Pulverizer Modifications

Existing mills may require changes to:

- Primary air
- Motors
- Grinding elements
- Classifiers
- Fuel Transport Lines (saltation velocity)
- Explosion suppression

Long cleanout times to be expected

© 2011 Babcock & Wilcox Power Generation Group, Inc. All rights reserved.

Biomass Co-Fired Burners

Do not exceed rated burner input *(coal + biomass)*

If <u>blended fuel to burner</u>: *Increases nozzle velocity which destabilizes flame at higher inputs. Flame stability can also suffer with high moisture biomass.*

If <u>injected through separate burner nozzle</u>: *Low inputs acheivable with small nozzles in existing burners. High biomass inputs (40 to 50%) can be accommodated with larger nozzles but probably requires new burners.*

© 2011 Babcock & Wilcox Power Generation Group, Inc. All rights reserved.

Dedicated Biomass Burners

Expect to change fuel piping due to higher air-to-fuel ratio

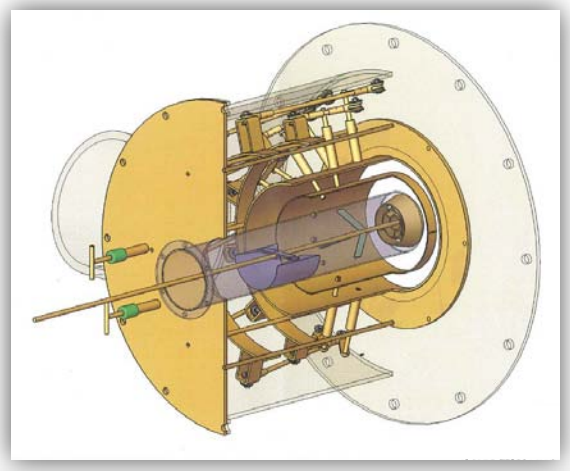

New burners may be required to accomodate:

- Larger fuel nozzles
- Smaller secondary air zone

© 2011 Babcock & Wilcox Power Generation Group, Inc. All rights reserved.

Auxiliary Equipment

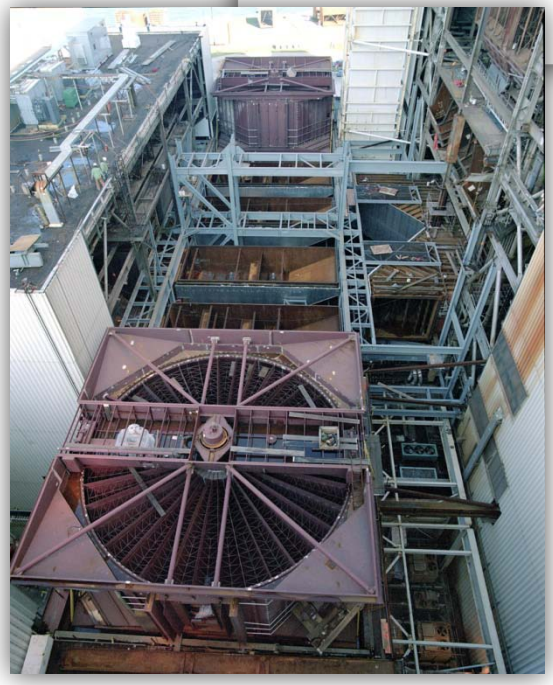

Fans

- PA fan(s) my be inadequate

Sootblowers

- Depends on fuels

Ash systems

- Depends on fuels

HT Surface & Airheaters

- Need to be reviewed for performance & operational considerations

© 2011 Babcock & Wilcox Power Generation Group, Inc. All rights reserved.

Air Quality Control Systems

SCR

- Catalyst degradation due to ash
- Unburned carbon considerations

Particulate Control

- Unburned cinders in baghouse and ESP
- Wet & dry ESPs well suited for biomass

Scrubbers

- Both wet & dry process well suited for biomass

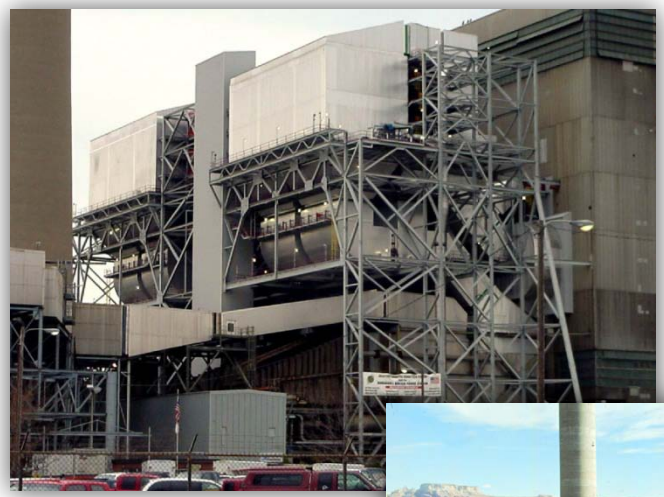

© 2011 Babcock & Wilcox Power Generation Group, Inc. All rights reserved.

Economic Considerations

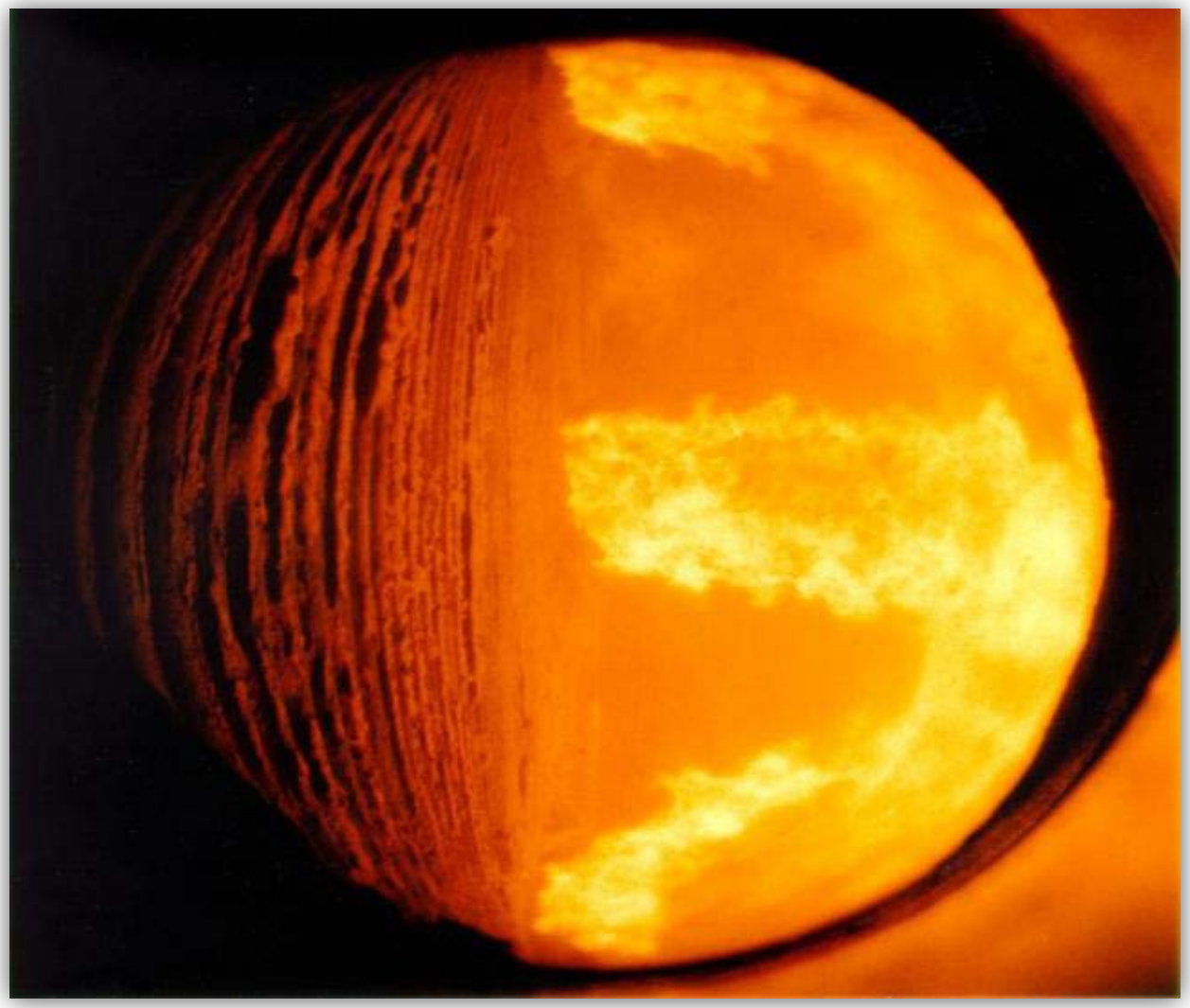

© 2011 Babcock & Wilcox Power Generation Group, Inc. All rights reserved.

May 29, 2009 By Chris Holly

FirstEnergy Retools Coal I

FirstEnergy Corp. has announced plans to
coal-fired power plant to burn biomass to p
year-old facility one of the nation's largest
biomass plant in FirstEnergy's generation

The two Burger units had been targeted by the Environmental Protection Agency (EPA) for alleged violations of the Clean Air Act's New Source Review provisions.

—Chris Holly (cholly@accessintel.com) is a reporter for *COAL POWER*'s sister publication, *The Energy Daily*.

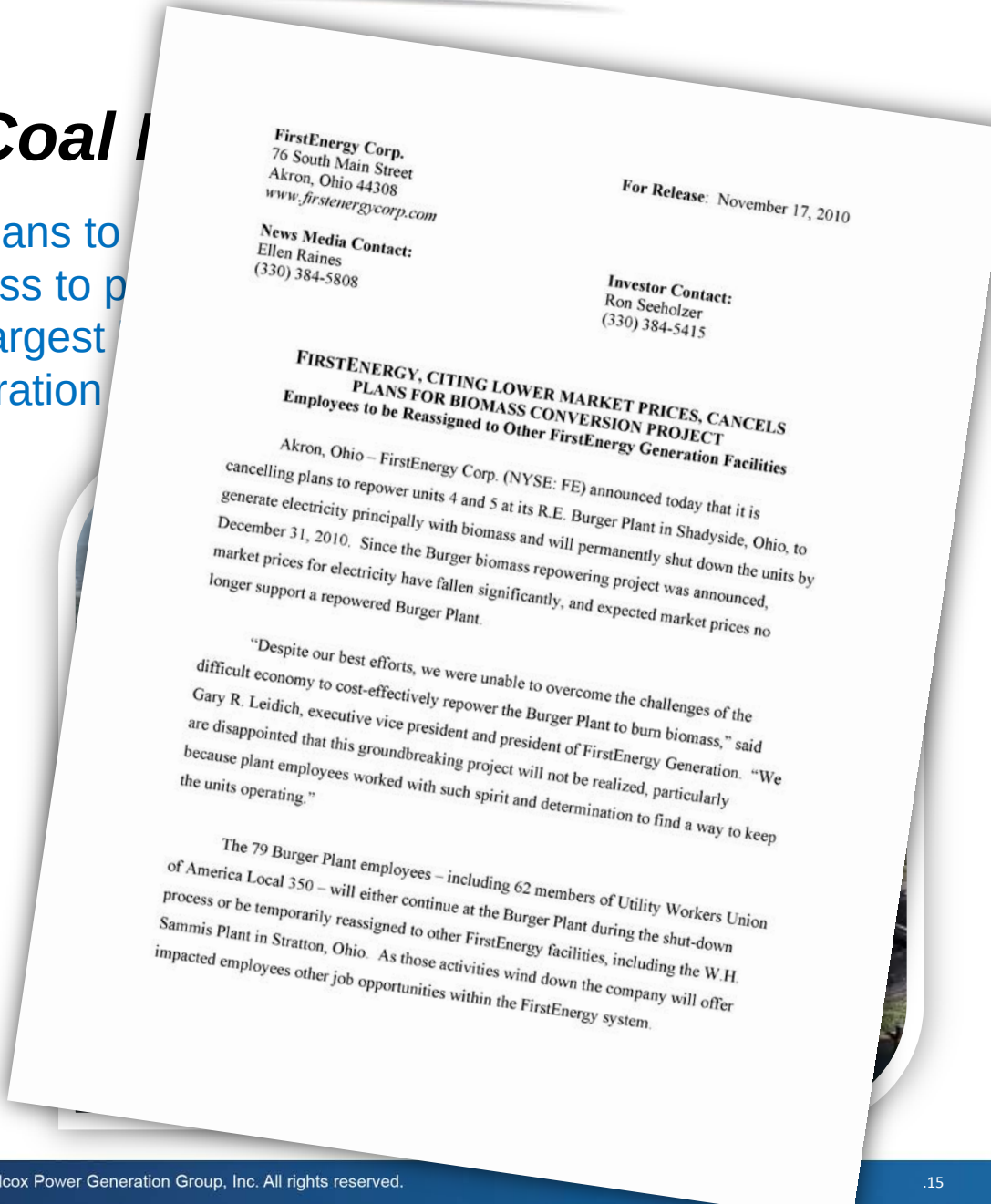

FirstEnergy Corp.
76 South Main Street
Akron, Ohio 44308
www.firstenergycorp.com

News Media Contact:
Ellen Raines
(330) 384-5808

For Release: November 17, 2010

Investor Contact:
Ron Seeholzer
(330) 384-5415

FIRSTENERGY, CITING LOWER MARKET PRICES, CANCELS PLANS FOR BIOMASS CONVERSION PROJECT
Employees to be Reassigned to Other FirstEnergy Generation Facilities

Akron, Ohio – FirstEnergy Corp. (NYSE: FE) announced today that it is cancelling plans to repower units 4 and 5 at its R.E. Burger Plant in Shadyside, Ohio, to generate electricity principally with biomass and will permanently shut down the units by December 31, 2010. Since the Burger biomass repowering project was announced, market prices for electricity have fallen significantly, and expected market prices no longer support a repowered Burger Plant.

"Despite our best efforts, we were unable to overcome the challenges of the difficult economy to cost-effectively repower the Burger Plant to burn biomass," said Gary R. Leidich, executive vice president and president of FirstEnergy Generation. "We are disappointed that this groundbreaking project will not be realized, particularly because plant employees worked with such spirit and determination to find a way to keep the units operating."

The 79 Burger Plant employees – including 62 members of Utility Workers Union of America Local 350 – will either continue at the Burger Plant during the shut-down process or be temporarily reassigned to other FirstEnergy facilities, including the W.H. Sammis Plant in Stratton, Ohio. As those activities wind down the company will offer impacted employees other job opportunities within the FirstEnergy system.

© 2011 Babcock & Wilcox Power Generation Group, Inc. All rights reserved.

Challenge: Plant Modifications

Total Capital Outlay ($ millions)	
Material handling system	$ 67
Mill, burner and furnace changes	51
Site prep and balance of plant systems	24
SNCR and ESP changes	10
Plant reliability projects	48
Total	***$ 200***

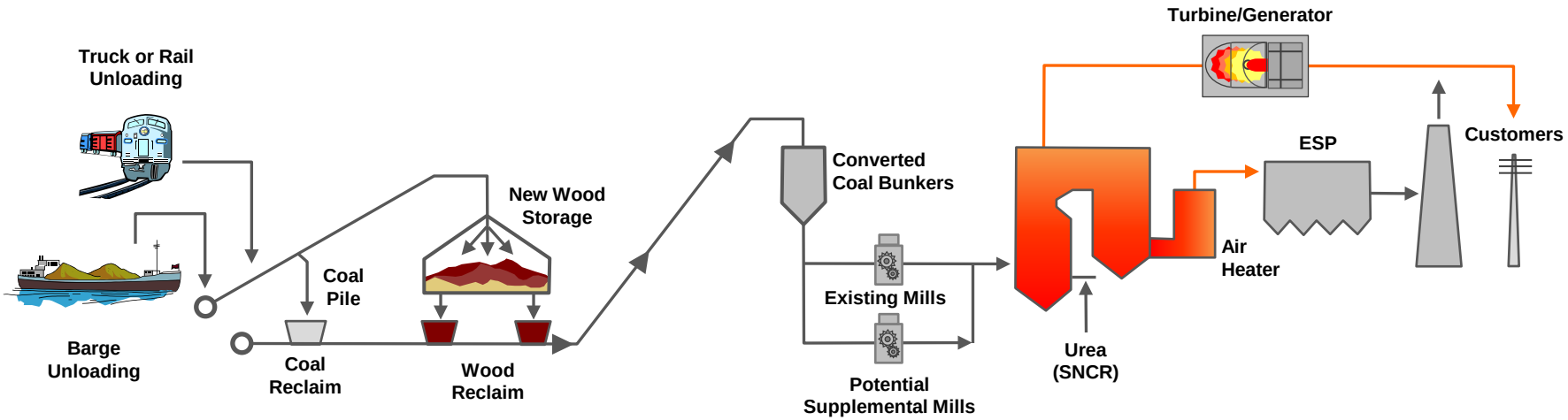

- Weather proof barge unloading and conveyance
  - Keep pellets dry
  - New buildings
- New wood storage buildings
- Modify conveyors
  - Keep pellets dry
  - Address steep angles
  - Dust suppression
  - Fire protection
- Modify coal bunkers for wood pellets
- Modify existing mills
- Boiler changes
  - Accommodate higher flue gas velocities and temperatures
- New burner system
  - Reduce NO_x emissions
- Change SNCR system
- Change ash handling and disposal system

Courtesy of FirstEnergy

© 2011 Babcock & Wilcox Power Generation Group, Inc. All rights reserved.

First Energy Burger Biomass Case Study

Case 1: Fuel switching to engineered biomass (pellets) only

Case 2: Fuel switching to multiple biomass sources (whole tree chips, ag. products, pellets)

© 2011 Babcock & Wilcox Power Generation Group, Inc. All rights reserved.

R.E. Burger Boiler Specifics

- Generating Capacity ~150 Mwg
- Eastern Bituminous Coal
- Full Reheat Cycle
- Tubular Air Heater
- Low NO_x Burners
- B&W EL-70 Pulverizers
- ESP-Dry

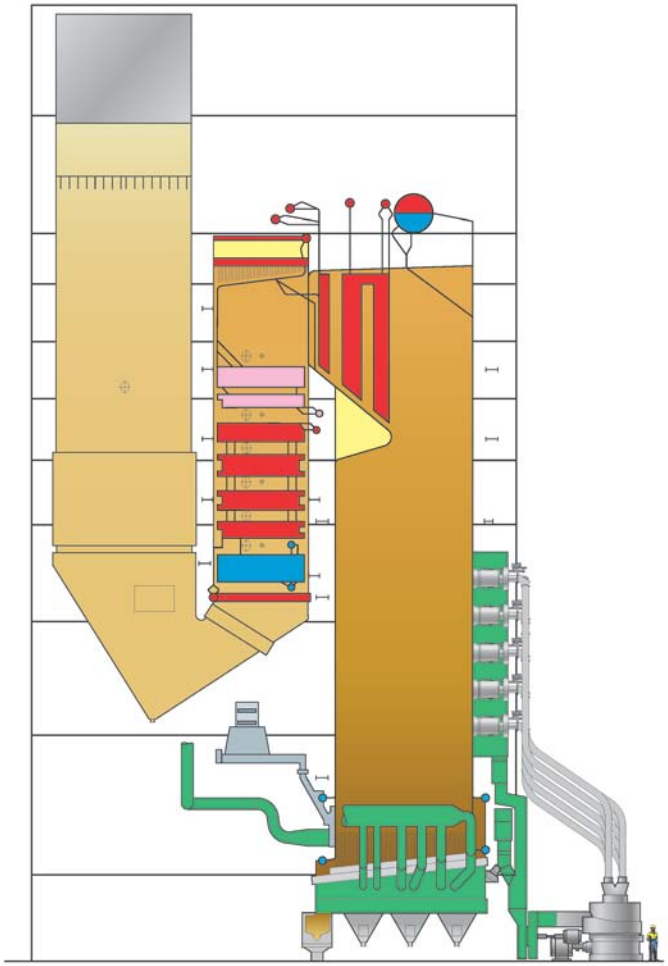

© 2011 Babcock & Wilcox Power Generation Group, Inc. All rights reserved.

Case 1 Suspension Firing Only

- *Primary Fuel=Wood Pellets/Torrified Wood*
- *Minimal Boiler Modifications*
- *New Wood Burners + OFA*
- *Modified Pulverizers*
- *Covered Fuel Storage*

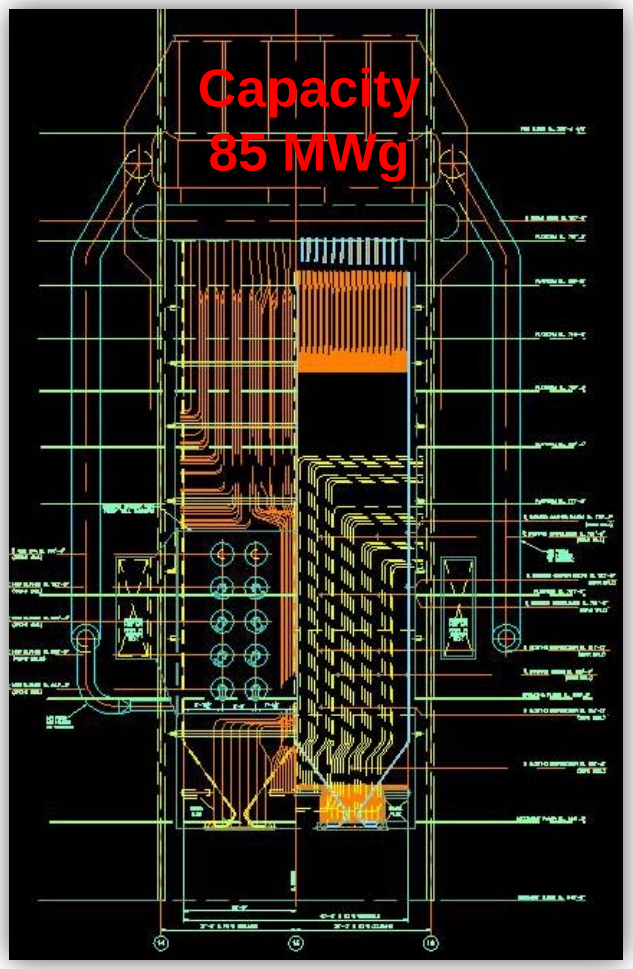

© 2011 Babcock & Wilcox Power Generation Group, Inc. All rights reserved.

Case 2 – Fuel Flexible Option

- ***Primary Fuel=Wood Chips, Ag Products, Wood Pellets***
- ***Boiler Modifications***
- ***Suspension Burners + OFA***
- ***Modified Pulverizers***
- ***Stoker Addition***
- ***Covered Fuel Storage***

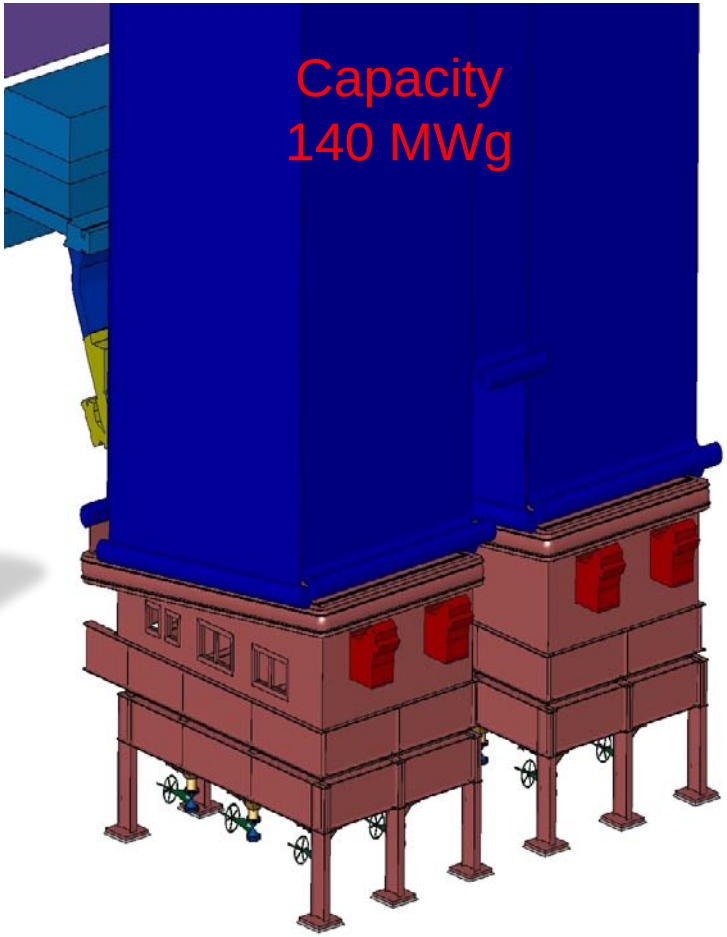

© 2011 Babcock & Wilcox Power Generation Group, Inc. All rights reserved.

Capital vs. Fuel Costs/Flexibility

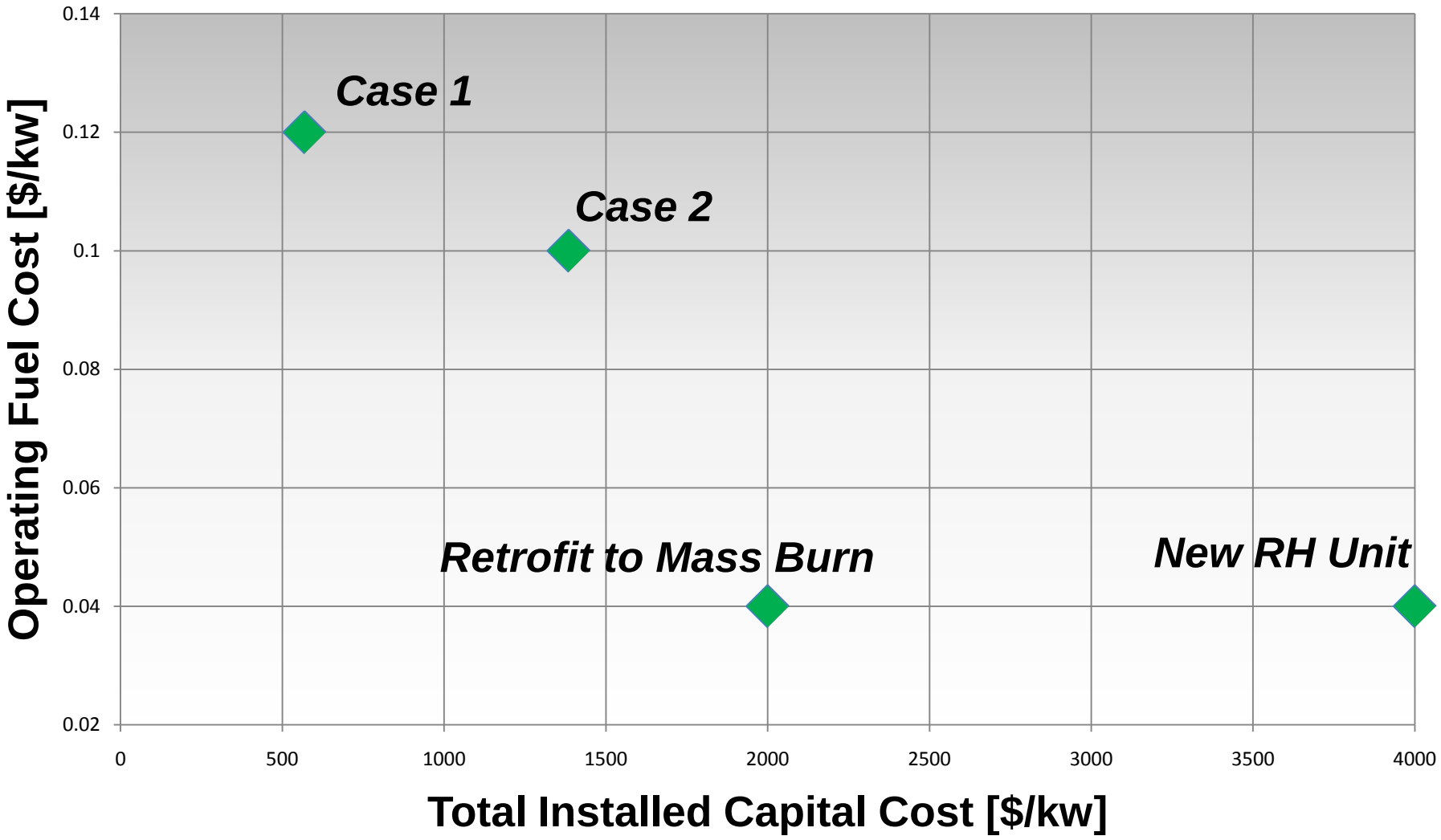

© 2011 Babcock & Wilcox Power Generation Group, Inc. All rights reserved.

Thank You

© 2011 Babcock & Wilcox Power Generation Group, Inc. All rights reserved.