represent the interested parties and operate most effectively with no more than 12–16 members. The facilitator will not count against the membership. Section 568(c) of the NRA states:

> Members of a negotiated rulemaking committee shall be responsible for their own expenses of participation in such committee, except that an agency may, in accordance with section 7(d) of the FACA, pay for a member's reasonable travel and per diem expenses, expenses to obtain technical assistance, and a reasonable rate of compensation, if (1) Such member certifies a lack of adequate financial resources to participate in the committee; and (2) The agency determines that such member's participation in the committee is necessary to assure an adequate representation of the member's interest.

D. Request for Nominations

AMS solicits nominations for appointment to membership on the Committee. Members can be individuals or representatives of organizations. An organization should identify the individual who will be its representative. Committee members need to have authorization to negotiate on behalf of their interests and be willing to negotiate in good faith. AMS interprets good faith to include: (1) A willingness to bring all issues to the table; and (2) not to discuss the issues in other forums. Good faith also includes a willingness to move away from taking adversarial positions and instead to explore openly all relevant and productive ideas that may emerge from the discussion of the Committee.

Authorization for each application or nomination must include:

1. The name of the applicant or nominee and a description of the interests such person will represent;
2. A description of the person's qualifications and expertise regarding those interests;
3. Whether the participant will be seeking agency resources to participate on the committee; and
4. A written commitment of the applicant or nominee to actively participate in good faith in the negotiated rulemaking.

E. Tentative Schedule

Once AMS makes the final determination on Committee membership, it will publish another document in the **Federal Register** announcing the final list of members. A proposed agenda and schedule for completing the work of the Committee, including a date for the first meeting, will also be included in the document.

Once formally established and assembled, the Committee will have reasonable latitude to determine appropriate number and frequency of meetings necessary to achieve its objectives. However, for planning purposes, AMS expects the Committee will meet three to four times at various locations across the country. AMS expects that each meeting will last approximately three days. The Committee's work is expected to occur over the course of 3 to 4 months in order to allow sufficient time to reach consensus for a proposed rule.

AMS and its facilitator will, throughout the process, provide necessary technical and logistical support to the Committee. In addition, once the Committee is established, it may seek advisors or subject matter experts to provide information valuable to the decision-making process.

V. Requests for Nominations and Comments

To comply with negotiated rulemaking procedures, AMS invites written comments on this initiative and nominations for the negotiated rulemaking committee. Nominations are for all interests that could be affected by mandatory pork reporting and must comply with paragraph IV, D, Request for Nominations, of this document. All written comments and nominations must be sent to an appropriate address as listed in the **ADDRESSES** section of this Notice.

Dated: November 18, 2010.

David R. Shipman,

Acting Administrator, Agricultural Marketing Service.

[FR Doc. 2010–29551 Filed 11–23–10; 8:45 am]

BILLING CODE 3410–02–P

DEPARTMENT OF ENERGY

10 CFR Part 430

[Docket No. EERE–2009–BT–TP–0016]

RIN 1904–AB99

Energy Conservation Program: Test Procedures for Fluorescent Lamp Ballasts

AGENCY: Office of Energy Efficiency and Renewable Energy, Department of Energy.

ACTION: Supplemental notice of proposed rulemaking.

SUMMARY: The U.S. Department of Energy (DOE) proposes to revise its test procedures for fluorescent lamp ballasts established under the Energy Policy and Conservation Act. The proposed test method would eliminate the use of photometric measurements in favor of purely electrical measurements with the goal of reducing measurement variation. Furthermore, this proposed test procedure would measure a new metric, ballast luminous efficiency (BLE), which more directly assesses the electrical losses in a ballast compared to the existing ballast efficacy factor (BEF) metric. Rather than testing a ballast with a resistive load as proposed in the March 24, 2010 notice of proposed rulemaking (NOPR), the BLE test procedure would measure the performance of a ballast while operating a fluorescent lamp.

DATES: DOE will accept comments, data, and information regarding this supplemental notice of proposed rulemaking (SNOPR) no later than December 27, 2010. *See* section V, "Public Participation," of this SNOPR for details.

ADDRESSES: Any comments submitted must identify the Fluorescent Lamp Ballast Active Mode Test Procedure SNOPR, and provide the docket number EERE–2009–BT–TP–0016 and/or Regulation Identifier Number (RIN) 1904–AB99. Comments may be submitted using any of the following methods:

Federal eRulemaking Portal: http://www.regulations.gov. Follow the instructions for submitting comments.

E-mail: FLB-2009-TP-0016@ee.doe.gov. Include the docket number EERE–2009–BT–TP–0016 and/or RIN 1904–AB99 in the subject line of the message.

Postal Mail: Ms. Brenda Edwards, U.S. Department of Energy, Building Technologies Program, Mailstop EE–2J, 1000 Independence Avenue, SW., Washington, DC 20585–0121. Please submit one signed paper original.

Hand Delivery/Courier: Ms. Brenda Edwards, U.S. Department of Energy, Building Technologies Program, 6th Floor, 950 L'Enfant Plaza, SW., Washington, DC 20024. Telephone: (202) 586–2945. Please submit one signed paper original.

For detailed instructions on submitting comments and additional information on the rulemaking process, see section V, "Public Participation," of this document.

Docket: For access to the docket to read background documents or comments received, visit the U.S. Department of Energy, 6th Floor, 950 L'Enfant Plaza, SW., Washington, DC 20024, (202) 586–2945, between 9 a.m. and 4 p.m., Monday through Friday, except Federal holidays. Please call Ms. Brenda Edwards at (202) 586–2945 for additional information regarding visiting the Resource Room.

FOR FURTHER INFORMATION CONTACT: Ms. Linda Graves, U.S. Department of Energy, Office of Energy Efficiency and Renewable Energy, Building Technologies Program, EE–2J, 1000 Independence Avenue, SW., Washington, DC 20585–0121. *Telephone:* (202) 586–1851. *E-mail: Linda.Graves@ee.doe.gov.* In the Office of General Counsel, contact Ms. Elizabeth Kohl, U.S. Department of Energy, Office of the General Counsel, GC–71, 1000 Independence Avenue, SW., Washington, DC 20585. *Telephone:* (202) 586–7796. *E-mail: Elizabeth.Kohl@hq.doe.gov.*

For additional information on how to submit or review public comments, contact Ms. Brenda Edwards, U.S. Department of Energy, Office of Energy Efficiency and Renewable Energy, Building Technologies Program, EE–2J, 1000 Independence Avenue, SW., Washington, DC 20585–0121. *Telephone:* (202) 586–2945. *E-mail: Brenda.Edwards@ee.doe.gov.*

SUPPLEMENTARY INFORMATION:

Table of Contents

I. Authority and Background
II. Summary of the Supplemental Notice of Proposed Rulemaking
III. Discussion
A. Existing Test Procedure
B. Metric
C. Test Procedures Considered
1. Resistor-based Ballast Efficiency Correlated to BEF
2. Lamp-based Ballast Efficiency Correlated to BEF
3. Improved Light-Output-Based Test Procedure
4. Relative System Efficacy
5. Dimming Ballast Test Procedure
D. Test Procedure Proposal
1. Test Conditions
2. Test Setup
3. Test Method
4. Calculations
5. Updates to Existing Test Procedure
6. Normative References for ANSI C82.2–2002
E. Burden To Conduct the Proposed Test Procedure
F. Impact on Measured Energy Efficiency
G. Scope of Applicability
H. Certification and Enforcement
IV. Procedural Issues and Regulatory Review
A. Executive Order 12866
B. National Environmental Policy Act
C. Regulatory Flexibility Act
D. Paperwork Reduction Act
E. Unfunded Mandates Reform Act of 1995
F. Treasury and General Government Appropriations Act, 1999
G. Executive Order 13132
H. Executive Order 12988
I. Treasury and General Government Appropriations Act, 2001
J. Executive Order 13211
K. Executive Order 12630
L. Section 32 of the Federal Energy Administration Act of 1974
V. Public Participation
A. Submission of Comments
B. Issues on Which DOE Seeks Comment
1. Impact of Ballast Output on Lamp Efficacy
2. Ballast Factor Calculation
3. Impact of Reference Lamp Measured Power Variation on Ballast Factor
4. NVLAP Accreditation
VI. Approval of the Office of the Secretary

I. Authority and Background

Title III of the Energy Policy and Conservation Act (42 U.S.C. 6291 *et seq.;* EPCA) sets forth a variety of provisions designed to improve energy efficiency. Part A of Title III (42 U.S.C. 6291–6309) establishes the "Energy Conservation Program for Consumer Products Other Than Automobiles," which covers consumer products and certain commercial products (all of which are referred to below as "covered products"), including fluorescent lamp ballasts (ballasts). (42 U.S.C. 6291(1), (2) and 6292(a)(13))

Under EPCA, the overall program consists essentially of the following parts: Testing, labeling, certification and enforcement, and Federal energy conservation standards. The testing requirements consist of test procedures that manufacturers of covered products must use as the basis for certifying to DOE that their products comply with energy conservation standards and for representing the efficiency of their products. Also, these test procedures must be used whenever testing is required in an enforcement action to determine whether covered products comply with EPCA standards.

Section 323 of EPCA (42 U.S.C. 6293) sets forth generally applicable criteria and procedures for DOE's adoption and amendment of test procedures. It states, for example, that "[a]ny test procedures prescribed or amended under this section shall be reasonably designed to produce test results which measure energy efficiency, energy use, * * * or estimated annual operating cost of a covered product during a representative average use cycle or period of use, as determined by the Secretary [of Energy], and shall not be unduly burdensome to conduct." (42 U.S.C. 6293(b)(3)) In addition, if DOE determines that a test procedure amendment is warranted, it must publish proposed test procedures and offer the public an opportunity to present oral and written comments on them. (42 U.S.C. 6293(b)(2)) Finally, in any rulemaking to amend a test procedure, DOE must determine "to what extent, if any, the proposed test procedure would alter the measured energy efficiency * * * of any covered product as determined under the existing test procedure." (42 U.S.C. 6293(e)(1)) If DOE determines that the amended test procedure would alter the measured efficiency of a covered product, DOE must amend the applicable energy conservation standard accordingly. (42 U.S.C. 6293(e)(2))

As to fluorescent lamp ballasts specifically, DOE must "prescribe test procedures that are in accord with ANSI [1] standard C82.2–1984 [2] or other test procedures determined appropriate by the Secretary." (42 U.S.C. 6293(b)(5)) DOE's existing test procedures for ballasts, adopted pursuant to these and the above-described provisions, appear at 10 CFR Part 430, Subpart B, Appendix Q.

The Energy Independence and Security Act of 2007 also amended EPCA to require DOE to review test procedures for all covered products at least once every seven years. DOE must either amend the test procedures or publish notice in the **Federal Register** of any determination not to amend a test procedure. (42 U.S.C. 6293(b)(1)(A)) To fulfill this periodic review requirement, DOE invites comment on all aspects of the existing test procedures for fluorescent lamp ballasts that appear at Title 10 of the CFR part 430, subpart B, appendix Q ("Uniform Test Method for Measuring the Energy Consumption of Fluorescent Lamp Ballasts").

In a separate rulemaking proceeding, DOE is considering amending energy conservation standards for fluorescent lamp ballasts (docket number EERE–2007–BT–STD–0016; hereinafter referred to as the "fluorescent lamp ballast standards rulemaking"). DOE initiated that rulemaking by publishing a **Federal Register** (FR) notice announcing a public meeting and availability of the framework document ("Energy Efficiency Program for Consumer Products: Public Meeting and Availability of the Framework Document for Fluorescent Lamp Ballasts") on January 22, 2008. 73 FR 3653. On February 6, 2008, DOE held a public meeting in Washington, DC to discuss the framework document for the fluorescent lamp ballast energy conservation standards rulemaking (hereinafter referred to as the "2008 public meeting"). At that meeting, attendees also discussed potential revisions to the test procedure for active mode energy consumption relevant to this test procedure rulemaking. On March 24, 2010, DOE published a notice of public meeting and availability of the preliminary technical support document

[1] American National Standards Institute.

[2] "American National Standards for Fluorescent Lamp Ballasts—Methods of Measurement." Approved October 21, 1983.

(TSD) for the fluorescent lamp ballast standards rulemaking. 75 FR 14319.

DOE also published a test procedure notice of proposed rulemaking NOPR on March 24, 2010. 75 FR 14288. On April 26, 2010, DOE held a joint public meeting to discuss the test procedure proposals in the NOPR and the preliminary TSD for the fluorescent lamp ballast standards rulemaking (hereafter "NOPR public meeting"). All comments on the fluorescent lamp ballast test procedure rulemaking are discussed in section III of this proposed rulemaking.

As mentioned in the NOPR, DOE has also completed a standby mode and off mode test procedure. The Energy Independence and Security Act of 2007 (Pub. L. 110–140) amended EPCA to require that, for each covered product for which DOE's current test procedures do not fully account for standby mode and off mode energy consumption, DOE amend the test procedures to include standby mode and off mode energy consumption into the overall energy efficiency, energy consumption, or other energy descriptor for that product. If an integrated test procedure is technically infeasible, DOE must prescribe a separate standby mode and off mode energy use test procedure, if technically feasible. (42 U.S.C. 6295(gg)(2)(A)) DOE published a final rule addressing standby mode and off mode energy consumption for fluorescent lamp ballasts in the **Federal Register** on October 22, 2009. 74 FR 54445. This supplemental notice of proposed rulemaking does not propose any changes to the measurement of standby and off mode energy consumption for fluorescent lamp ballasts.

II. Summary of the Supplemental Notice of Proposed Rulemaking

In this supplemental notice of proposed rulemaking (SNOPR), DOE proposes to modify the current procedures for fluorescent lamp ballasts to reduce measurement variation and reduce testing burden. The proposed method would eliminate photometric measurements and propose the use of electrical measurements of a lamp-and-ballast system. In addition, this test procedure measures a new metric, ballast luminous efficiency (BLE), which more directly assesses the electrical losses in a ballast compared to the existing ballast efficacy factor (BEF) metric. The SNOPR proposal also describes a new method for calculating the ballast factor (BF) of a system. DOE also outlines the scope of applicability of the test procedure and proposes a minor update of the existing test procedure in appendix Q. The following paragraphs summarize these proposed changes.

In the NOPR, DOE proposed a resistor-based ballast efficiency measurement that would then be correlated to BEF. In response to comments received citing the limitations of a resistor-based measurement, DOE proposes in this SNOPR to measure ballast input power and lamp arc power using only electrical measurements of a lamp-and-ballast system. Variation in the measured power of a reference lamp is minimized by the calculation of ballast luminous efficiency, where BLE is equal to total lamp arc power divided by ballast input power. To account for the increase in lamp efficacy associated with high-frequency lamp operation versus low-frequency, DOE is also proposing an adjustment to the BLE of low-frequency systems. DOE is proposing that low-frequency BLE be multiplied by 0.9 to account for the approximately 10% increase in lighting efficacy associated with high-frequency lamp operation. DOE also proposes a method for calculating the ballast factor (BF) of a ballast by dividing the measured lamp arc power on the test ballast by the measured lamp arc power on a reference ballast. Ballast factor is under consideration in the fluorescent lamp ballast standards rulemaking as criteria for defining product classes. In cases where reference ballast operating conditions are unavailable, the SNOPR provides a reference lamp power (specific to the ballast type) from an ANSI standard or from empirical results. Particular lamp and ballast pairings are specified for both the BLE and BF measurements.

In the preliminary technical support document for the fluorescent lamp ballast standards rulemaking, DOE makes a preliminary determination of the scope of coverage. Today's proposed test procedure includes specific provisions for the testing of ballasts identified in the preliminary determination of scope. If the scope of coverage changes in later stages of the fluorescent lamp ballast standards rulemaking, DOE will add or remove provisions from the test procedure so that it is consistent with the final scope of coverage of standards. See section III.G for further detail.

In any rulemaking to amend a test procedure, DOE must determine "to what extent, if any, the proposed test procedure would alter the measured energy efficiency * * * of any covered product as determined under the existing test procedure." (42 U.S.C. 6293(e)(1)) If DOE determines that the amended test procedure would alter the measured efficiency of a covered product, DOE must amend the applicable energy conservation standard accordingly. (42 U.S.C. 6293(e)(2)) The proposed test procedure will describe the efficiency of a ballast in terms of a new metric, BLE. To ensure that the standards developed in the ongoing fluorescent lamp ballast standards rulemaking account for any changes to the test procedure, DOE is developing the standards based on the measured BLE generated by the active mode test procedure proposed in this rulemaking. As a result, DOE proposes that use of any revised test procedure, to be published as Appendix Q1 of 10 CFR part 430 Subpart B, would be required concurrent with the compliance date of any amended fluorescent lamp ballast standards. DOE is required by a consent decree to issue any amended fluorescent lamp ballast standards by June 30, 2011.

As described in the NOPR, DOE notes that ballasts that operate one or two 40 or 34 watt (W) 4-foot T12 medium bipin lamps (F40T12 and F34T12), two 75 W or 60 W 8-foot T12 single pin slimline lamps (F96T12 and F96T12/ES); and two 110 W and 95 W 8-foot T12 recessed double contact high output lamps (F96T12HO and F96T12HO/ES) are covered by existing energy conservation standards. 10 CFR 430.32(m). Until use of any amended test procedure to be published at Appendix Q1 is required, manufacturers should continue testing these ballasts using the existing test procedure to determine compliance with existing standards. In the NOPR, DOE proposed to make minor updates to the existing test procedure, published at Appendix Q to Subpart B of part 430. The SNOPR does not affect this proposal. DOE would update the reference to ANSI C82.2–1984 in the existing test procedure (appendix Q) to ANSI C82.2–2002.[3] Because DOE does not believe the updated standard will impose increased testing burden or alter the measured BEF of fluorescent lamp ballasts, DOE proposes that use of the amendments to Appendix Q be required upon the effective date of any test procedure final rule, 30 days after publication. In addition, the test procedures for any ballasts that operate in standby mode are also located in Appendix Q.

III. Discussion

A. Existing Test Procedure

The existing ballast test procedure (in Appendix Q to subpart B of 10 CFR part

[3] "American National Standards for Lamp Ballasts—Method of Measurement of Fluorescent Lamp Ballasts," approved June 6, 2002.

430) determines the energy efficiency of a fluorescent lamp ballast based on light output measurements and ballast input power. The metric used is called ballast efficacy factor. BEF is the relative light output divided by the power input of a fluorescent lamp ballast, as measured under test conditions specified in ANSI standard C82.2–1984, or as may be prescribed by the Secretary. (42 U.S.C. 6291(29)(C))

The BEF metric uses light output of the lamp-and-ballast system instead of ballast electrical output power in its calculation of the efficiency of a ballast. To measure relative light output, ANSI C82.2–1984 directs the user to measure the photocell output [4] of the test ballast operating a reference lamp and the light output of a reference ballast operating the same reference lamp. Dividing photocell output of the test ballast system by the photocell output of the reference ballast system yields relative light output or ballast factor. Concurrent with measuring relative light output, the user is directed to measure ballast input power. BEF is then calculated by dividing relative light output by input power and multiplying by 100. A ballast that produces more light than another ballast with the same input power will have a larger BEF.

The National Electrical Manufacturers Association (NEMA) commented that BEF measurements would vary by plus or minus five percent and that this variation is unacceptable when trying to differentiate between products that vary in efficiency by three to five percent. (NEMA, No. 15 at p. 13) For BEF, the variation in measured power of the reference lamps (rated power ± 2.5%) plus the variation in the photometric measurement system itself leads to the plus or minus 5% variation. Given the variation observed in BEF measurement, NEMA also does not believe a thousandths place digit in a BEF measurement discussed in the proposed rule has any statistical validity. In contrast, NEMA noted that for the ballast efficiency (BE) measurement proposed in the NOPR, the power analyzer equipment introduces plus or minus 1.5% variation into the measurement and the current transducer and wiring capacitances contribute 1% for a total of plus or minus 2.5% variation (NEMA, Public Meeting Transcript, No. 12 at p. 15–16, 22–25).

DOE agrees that photometric based BEF measurements are more variable than electrical measurement based BE measurements. In this test procedure SNOPR, DOE is proposing a methodology that uses electrical measurements of a lamp and ballast system to measure BLE. The BLE metric includes a modification to the BE metric discussed in the NOPR to account for changes in lamp efficacy as a result of differences in lamp operating frequency.

B. Metric

In the NOPR, DOE proposed a resistor-based ballast efficiency measurement that would then be correlated to BEF, for consistency with the standards set forth at 42 U.S.C. 6295(g)(5) and (8). At the NOPR public meeting, the Appliance Standards Awareness Project (ASAP) and Earthjustice commented that they did not believe DOE was required to regulate ballasts using the BEF metric. (ASAP, Public Meeting Transcript, No. 12 at p. 98–99 [5]; Earthjustice, Public Meeting Transcript, No. 12 at p. 100)

In response to these comments, DOE is proposing a new metric to describe the efficiency of a ballast called ballast luminous efficiency (BLE). EPCA does not require DOE to set standards for fluorescent lamp ballasts using the BEF metric and grants DOE the authority to use test procedures for measuring energy efficiency that it determines are appropriate. (42 U.S.C. 6291, 6295(g), and 6293(b)(5)) The BLE metric and test procedure are based on the NEMA lamp-based ballast efficiency (BE) test procedure considered in the test procedure NOPR. Similar to the procedure considered in the NOPR, the BLE test procedure measures ballast input power and lamp arc power of a lamp-and-ballast system. The only difference between the BE procedure considered in the NOPR and the proposed BLE test procedure is the proposed adjustment to the BLE of low-frequency systems to account for the increase in lamp efficacy associated with high-frequency lamp operation versus low-frequency. Specifically, DOE is proposing that low-frequency BLE be multiplied by 0.9 to account for the approximately 10% increase in lighting efficacy associated with high-frequency lamp operation. DOE also proposes a method for calculating the ballast factor (BF) of a system by dividing the measured lamp arc power on the test ballast by the measured lamp arc power on a reference ballast. In cases where reference ballast operating conditions are unavailable, the SNOPR provides a reference lamp power (specific to the ballast type and operating frequency) from an ANSI standard or from empirical results. The ballast factor measurement is described in more detail in section III.D.4. Particular lamp and ballast pairings are specified for both the BLE and BF measurements.

DOE is proposing the BLE test procedure because it reduces measurement variation and testing burden compared to the existing test procedure. In contrast to BEF and RSE, the BLE metric can be used to compare the efficiency across many different types of ballasts. DOE also believes the use of a lamp-and-ballast system allows the ballast to operate at its natural operating point and will more accurately assess ballast performance than when the ballast test load is a resistor. Furthermore, a resistive load can only model the effective resistance of a lamp operated at a particular ballast factor, requiring multiple ballast factor specific resistors to be specified and increasing the testing cost to manufacturers. DOE also believes that the use of electrical measurements and the calculation of BLE reduce the impact of lamp manufacturing variation on the efficiency descriptor compared to the existing test procedure.

C. Test Procedures Considered

In the NOPR, DOE proposed a resistor-based ballast efficiency measurement correlated to BEF. DOE also provided descriptions of alternative test procedures it considered in the course of developing its proposal. Interested parties commented on the proposed methodology and the three alternative methods considered. The following sections discuss DOE's responses to interested party comments.

1. Resistor-Based Ballast Efficiency Correlated to BEF

In the NOPR, DOE proposed a test procedure to measure a resistor-based BE, which would then be correlated to BEF. This procedure used precision resistive loads to simulate the effective resistance of a fluorescent lamp as the ballast load. In response, DOE received many comments suggesting performance measurements of a lamp-and-ballast system will provide more realistic data than a resistor and ballast system while still reducing measurement variation compared to the existing method. These

[4] The photocell output of a light source is measured in units of watts. Photocell output (watts) is one method of measuring the light output of a light source. Through the remainder of this document, DOE refers to the output of a fluorescent lamp as "light output," even though the existing test procedure indicates measuring the light with photocell output.

[5] A notation in the form "ASAP, Public Meeting Transcript, No. 12 at p. 98–99" identifies a statement made in a public meeting that DOE has received and has included in the docket of this rulemaking. This particular notation refers to a comment: (1) Submitted during the public meeting on April 26, 2010; (2) in document number 12 in the docket of this rulemaking; and (3) appearing on pages 98 through 99 of the transcript.

comments are discussed in additional detail in section III.C.2. Discussed in the following paragraphs are comments DOE received on the proposed transfer equations, the ballasts selected for testing, and ballasts that do not operate resistors.

NEMA commented that it supports the BE method but prefers the ballast to be paired with reference lamps rather than precision resistors. NEMA and Osram Sylvania (OSI) commented that the ballast needs to be paired with a resistor matched to the ballast factor of the ballast for it to operate at its design point. A test procedure that requires multiple ballast factor specific resistors would be very expensive considering each resistive load bank costs 1000 to 2000 dollars and is only available on a custom order basis. (NEMA, No. 15 at p. 5, 11; NEMA, Public Meeting Transcript, No. 12 at p. 21–22, 38–39, 105; OSI, Public Meeting Transcript, No. 12 at p. 80)

DOE agrees that specifying multiple ballast-factor specific resistors would be burdensome and that the actual performance of a ballast is better measured while it is operating the natural lamp load. In this SNOPR, DOE proposes a procedure which is applicable to all ballasts and uses lamp loads in the measurement of ballast luminous efficiency.

DOE also received several comments in response to its proposed transfer equations between BE and BEF. The Northwest Energy Efficiency Alliance and the Northwest Power Conservation Council (NEEA and NPCC) commented that the transfer equations between BE and BEF may be error prone and may not attribute the correct BEF to a ballast. (NEEA & NPCC, Public Meeting Transcript, No. 12 at p. 86–87, 89, 167–168; NEEA & NPCC, No. 16 at p. 4–5) NEMA commented that a lighting designer might prefer BE to be correlated to BEF in order to compare lighting efficacy. NEMA also added that it does not believe small errors in the transfer equation to be an issue, because lighting designers do not require as high a level of accuracy when specifying a system. (NEMA, No. 15 at p. 9) Philips commented that the approach with the transfer equations is essentially to average the BEF values at a particular BE value and to plot a line through these points. Philips noted that the average BEF helps to account for the wide variation in BEF values. (Philips, Public Meeting Transcript, No. 12 at p. 87–91) Philips also indicated general agreement with the transfer equations for the ballasts that operate four foot medium bipin lamps. (Philips, Public Meeting Transcript, No. 12 at p. 94–95) OSI commented that the test data used to develop the transfer equations could bias the results if the BEF or BE values happened to test on the high or low end of the expected distribution of data. (OSI, Public Meeting Transcript, No. 12 at p. 166–167) NEMA commented that a percentage shift in the transfer equation between BE and BEF based on ballast factor would not necessarily be the same for all ballast types. In addition, NEMA commented that instant start ballasts should generally be more efficient than programmed start ballasts and the transfer equations should be consistent with this difference. (NEMA, Public Meeting Transcript, No. 12 at p. 21, 25–26) DOE appreciates the comments on the transfer equations. Because DOE is proposing a test procedure for BLE without correlation to another metric, however, DOE does not need to develop transfer equations or scaling relationships between equations.

In response to the test data presented in the fluorescent lamp ballast standards rulemaking, NEEA and NPCC commented that they understood DOE tested only normal BF ballasts and used scaling relationships to derive the BE and BEF for the high and low BF ballasts. (NEEA & NPCC, No. 32 at p. 4) DOE did test ballasts of all ballast factors, including low and high BF models. However, DOE tested low and high BF models using a resistor load that corresponded to a lamp driven by a normal BF ballast in an effort to reduce the inventory of resistors required for testing and reduce measurement burden. Because the ballast operates differently when attached to a resistor that does not properly match the ballasts' impedance, DOE developed separate transfer equations to correlate BE to BEF for different bins of BF (high, normal, and low [6]). In this SNOPR, however, DOE is proposing a test procedure based on a lamp-and-ballast system that does not employ resistive loads.

In its testing for development of the resistor-based BE test method for the NOPR, DOE observed that some ballasts did not operate resistors. NEMA commented that its round robin testing for its own investigation of the resistor-based BE test procedure showed that some ballasts do not start or operate correctly with resistor loads. NEMA commented that in some cases, the ballast senses the resistor is a non-lamp load and will shut down or fail to start entirely. Some labs overcome this issue by starting the ballast without this resistive load connected and then introducing the resistor after a short time (as short as 500 milliseconds). This setup can require program controllers which add parasitic capacitance and inductance. (NEMA, No. 15 at p. 5, 8) NEMA and General Electric (GE) also commented that the issue of some ballasts not operating resistors can be resolved by changing the procedure to involve lamp loads rather than resistors. NEMA noted that ballasts are designed to operate lamps, not resistors, and that using a lamp load will ensure a ballast starts and operates properly. (NEMA, Public Meeting Transcript, No. 12 at p. 39, 96–97; GE, Public Meeting Transcript, No. 12 at p. 97–98; NEMA, No. 15 at p. 6) Finally, the CA Utilities commented that they did not support the use of different test procedures for ballasts that do and do not operate resistors. (CA Utilities, No. 13 at p. 2–3) DOE agrees that a change of test procedure to involve lamp loads rather than resistive loads will resolve the issue of some ballasts not operating resistors properly and will provide a procedure applicable to all ballasts.

2. Lamp-Based Ballast Efficiency Correlated to BEF

In the NOPR, DOE considered a lamp-based BE measurement that would then be correlated to BEF using transfer equations. DOE defined this lamp-based BE as lamp arc power divided by ballast input power such that cathode heating power was included in the input but not in the output. This procedure is based largely on the BE test procedure described in the NEMA Alternative Test Procedure Handout, available at *http://www1.eere.energy.gov/buildings/appliance_standards/residential/pdfs/fl_ballast_tp_nema.pdf.* In this SNOPR, DOE is proposing a variation of lamp-based BE called ballast luminous efficiency (BLE). BLE is equal to lamp arc power divided by input power and then multiplied by an adjustment factor based on high- or low-frequency lamp operation. This adjustment factor accounts for the decreased lighting efficacy of low-frequency lamp operation. DOE references the BLE procedure in the responses to comments that follow on the lamp-based BE procedure, and provides more detail on the BLE procedure in section III.D. As discussed in the following paragraphs, DOE received comments suggesting a ballast should be tested with a lamp load (not a resistor), as well as comments on the potential drawbacks and benefits of the BE metric compared to BEF, a new method for the measurement of ballast factor, and the

[6] High ballast factor: BF ≥ 1.10; Normal ballast factor: 0.78 > BF > 1.10; Low ballast factor: BF ≤ 0.78.

validity of the lamp-based BE procedure for ballasts other than instant- and programmed-start ballasts with full cathode cutout.

DOE received several comments suggesting that BE is better measured with a lamp-and-ballast system rather than a resistor and ballast system. NEMA commented in the NOPR public meeting that it supports the adoption of the lamp-based BE test procedure. NEMA commented that the lamp-based BE procedure is simple, repeatable (testing variation of ±2.5 percent), and can be used to generate a stand-alone BE value or combined with a transfer equation to calculate BEF. NEMA also indicated that the procedure provides a clear description of ballast performance while minimizing the effects of reference lamps on the ballast and lamp system. (NEMA, No. 15 at p. 2, 7, 14; NEMA, Public Meeting Transcript, No. 12 at p. 20–21, 165–166; NEMA, Public Meeting Transcript, No. 12 at p. 38) NEMA commented that the ballast should operate a reference lamp when lamp arc power and ballast input power are measured. (NEMA, No. 15 at p. 14) Finally, OSI commented that ballast design laboratories are familiar with electrical efficiency testing, and typically make these measurements rather than photometric measurements when designing ballasts. (OSI, Public Meeting Transcript, No. 12 at p. 60).

NEEA and NPCC commented that they prefer the usage of fluorescent lamps as the load for a ballast when testing for ballast efficiency compared to the usage of resistive loads. (NEEA & NPCC, No. 16 at p. 5; NEEA & NPCC, No. 32 at p. 4 [7]) NEMA and GE also recommended that lamps be utilized as the load for testing the BE of a ballast. They also noted that lamps respond to the current supplied by a ballast, are readily available and inexpensive to procure, and provide a natural operating load for the ballast. (NEMA, Public Meeting Transcript, No. 12 at p. 22, GE, Public Meeting Transcript, No. 12 at p. 103; NEMA, No. 15 at p. 6–7) Philips agreed that the ballast should operate a lamp for the measurement of BE. (Philips, Public Meeting Transcript, No. 12 at p. 39) NEMA also commented that by correctly matching the lamp impedance to the ballast, the maximum power transfer from the ballast to the lamp occurs and the ballast operates at its design point and design efficiency. (NEMA, No. 15 at p. 6) Reference lamps are standardized and well characterized and can be procured from any lamp manufacturer. (NEMA, No. 15 at p. 6) Philips and GE commented that the lamp load should be a reference lamp to keep the ballast near its designed operating point. The reference lamp provides a common electrical operating point. (Philips, Public Meeting Transcript, No. 12 at p. 64; GE, Public Meeting Transcript, No. 12 at p. 63, 80) The CA Utilities agreed, commenting that if DOE adopts a BE based test procedure, it should use reference lamps as the ballast load. (CA Utilities, No. 13 at p. 2)

DOE agrees that electrical measurements of ballast performance are more realistic while the ballast is operating a lamp load compared to a purely resistive load. Though a resistive load provides a constant and repeatable operating point, a precision resistor is more expensive than a lamp, does not change impedance in response to ballasts of different ballast factor, and does not always provide the proper operating point for the ballast. DOE also understands that electrical measurements are commonly used in ballast design labs to ascertain performance. In this SNOPR, DOE is proposing ballast performance measurements based on a reference lamp-and-ballast system as the new test procedure for fluorescent lamp ballasts based on the NEMA Test Procedure Handout and comments from Philips and GE.

Philips and GE also commented that BE would be a more appropriate metric than BEF, because BE is a metric that allows for the comparison of all ballast systems, including different numbers of lamps or lamp type, using a common basis for the metric. (Philips, Public Meeting Transcript, No. 12 at p. 71; GE, Public Meeting Transcript, No. 12 at p. 74) GE also commented that BE is a useful metric for original equipment manufacturers when deciding which products to combine into their lighting systems. (GE, Public Meeting Transcript, No. 12 at p. 74–75) NEEA and NPCC commented, however, that a lighting designer may be more interested in meeting a lumen per unit area requirement than achieving a one or two percent difference in ballast efficiency. (NEEA & NPCC, Public Meeting Transcript, No. 12 at p. 73) NEEA and NPCC commented that ballasts are not useful except as part of a lighting system, suggesting that for a lighting product, lighting output per unit power input is the metric that matters. Because ballasts of increased electrical efficiency do not always produce the same amount of light, NEEA and NPCC gave first preference to an improved light-output-based test procedure, followed by a lamp-based BE metric without correlation to BEF, and finally the resistor-based BE test procedure with multiple ballast-factor specific resistors specified for each lamp. NEEA and NPCC also commented that lamp operating frequency has a large impact on light output. (NEEA & NPCC, No. 16 at p. 2, 5) In its written comments, NEMA stated that BEF could be calculated from BE using the reference arc power listed in ANSI C78.81–2010. NEMA also noted that its method of correlating BE to BEF would allow manufacturers to express the performance of the ballast in terms of BEF to engineers and lighting consultants while still using an electrical measurement for indicating compliance with energy conservation standards. (NEMA, No. 15 at p. 9)

The CA Utilities commented that the existing test procedure is more appropriate than the lamp-based BE measurement because it measures the two most important parameters to ballast consumers: Input power and light output. The CA Utilities commented that ballasts with the same BE may produce more or less light from the same lamp depending on the frequency at which they operate the lamp. Furthermore, the CA Utilities commented that for high-frequency ballasts, variations in frequency, crest factor, and wave shape can affect lamp efficacy. However, if DOE proposes a BE test procedure, the CA Utilities commented that they encourage DOE to keep the standards in terms of BE and not correlate to BEF. (CA Utilities, No. 13 at p. 1–3)

DOE believes BLE is the best metric for assessing the performance of a ballast. BLE provides for wide comparability among all types of ballasts and can distinguish between the efficacy of high- and low-frequency lamp operation. For ballast customers who prefer the BEF metric, DOE agrees that manufacturers could provide a BEF value calculated from the BLE measurement using the technique suggested by NEMA. As explained in the paragraphs that follow, DOE proposes a modification to the measurement of BE (resulting in the BLE metric) in this SNOPR to address the concerns of the CA Utilities and NEEA and NPCC on the impact of lamp operating frequency on light output. More detail on the BLE metric proposed in this SNOPR is provided in section III.D.

To account for the change in lighting efficacy as a result of lamp operating frequency, DOE has developed a modification to the metric measured in

[7] This written comment was submitted to the docket of the fluorescent lamp ballast standards rulemaking [Docket No. EERE–2007–BT–STD–0016; RIN 1904–AB50].

the NEMA Alternative Test Procedure Handout that DOE calls BLE. Under this metric, the lamp arc power for ballasts that operate lamps at low frequency will be multiplied by 0.9. This adjustment factor compensates for the reduced lamp efficacy that results from low-frequency operation. Figure III.1 shows lamp efficacy increases with increased operating frequency up to about 20 kHz, after which, lamp efficacy is close to constant.[8] DOE believes it is reasonable to assume a fixed adjustment factor for all high-frequency ballasts, as most high-frequency ballasts operate at greater than 20 kHz. DOE believes the impact of lamp current crest factor (LCCF) and waveform to have a minimal impact on efficacy compared to the difference between low and high frequency operation. Lamp current crest factor is limited by ANSI standards and does not affect lamp efficacy significantly. DOE also believes the difference in waveform has a minimal impact on lamp efficacy because the limitations on lamp current crest factor and power factor constrain the variety of waveforms present in the market. DOE seeks comment and data on the impact of LCCF and waveform on lamp efficacy and on its decision to adjust BLE for low-frequency ballasts by a factor of 0.9.

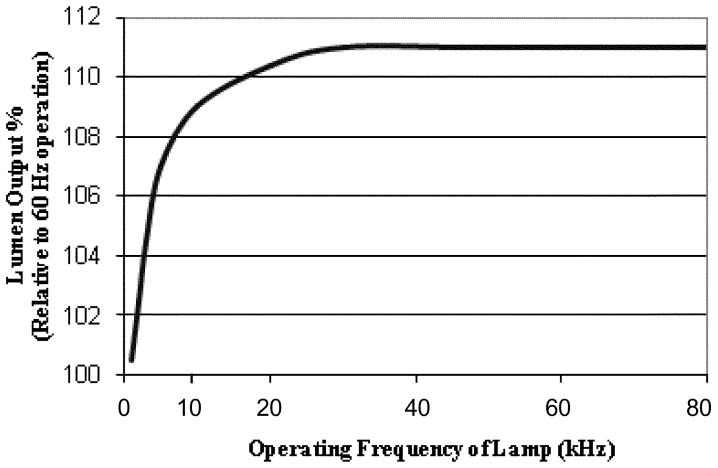

Figure III.1 Fluorescent Lamp Efficacy vs. Lamp Operating Frequency
Source: Adapted from The IESNA Lighting Handbook, 2000.

DOE received comment that the term ballast efficiency already has an accepted meaning in industry. NEMA commented that ballast efficiency can be defined as a purely electrical measurement that documents the true efficiency of a ballast by dividing total ballast output power by ballast input power. NEMA commented that ballast efficiency by itself does not account for the reduced system efficiency associated with ballasts that employ cathode heating and suggested measuring a metric defined as lamp arc power divided by ballast input power. (NEMA, No. 15 at p. 15; Philips, Public Meeting Transcript, No. 12 at p. 71–72) Philips commented that while cathode heating does increase lamp column efficacy, it does not offset the added energy required to heat the lamp electrodes. (Philips, Public Meeting Transcript, No. 12 at p. 44–46) In the NOPR, DOE defined ballast efficiency as lamp arc power divided by ballast input power, but in the SNOPR, DOE is proposing the metric ballast luminous efficiency (BLE), which is defined as lamp arc power divided by ballast input power multiplied by an adjustment factor for low-frequency operation. The alternative nomenclature BLE also indicates that the metric is slightly different than a true ballast efficiency measurement. DOE believes the BLE procedure accurately accounts for the diminished system efficacy associated with lamp cathode heating by only including lamp arc power (not cathode heating) in the ballast output measurement.

GE and NEMA commented that the impact of lamp to lamp variation is minimized with the lamp-based BE test procedure because variations in lamp measured power will impact ballast input power and ballast output power in such a way that the ratio of ballast efficiency is mostly unaffected. (GE, Public Meeting Transcript, No. 12 at p. 62–63; NEMA, No. 15 at p. 6) DOE agrees that the metric of lamp arc power divided by ballast input power is mostly unaffected by lamp to lamp variation. Because variations in lamp power affect both the numerator and denominator, the calculation of BE (as defined in the NOPR) or BLE (as defined in this SNOPR) minimizes the impact. This is in contrast to the existing light-output based test procedure where variations in lamp measured power have significant impact on ballast input power but not relative light output.

NEMA commented that the lamp-based BE measurement would be preferable to the resistor-based BE measurement proposed in the NOPR because it would allow for measurement of ballast performance at steady state. The resistor-based BE method involves measurement of ballast performance within one minute of energizing the ballast, and the resistor then needs to rest for one minute so that an increase in temperature would not impact its resistance. NEMA commented that unlike resistors, lamps do not have a duty cycle requirement necessitating them to be run for long periods of time without deviation from the desired operating point. (NEMA, No. 15 at p. 6) GE commented that the lamp-based BE test procedure measures ballast performance at steady-state, in contrast to the resistor-based test procedure proposed in the NOPR. NEMA and GE

[8] Rea, Mark S., ed. *The IESNA Lighting Handbook: Reference & Application, 9th Edition.* 2000. The Illuminating Engineering Society of America: New York, New York.

commented that certain ballast components such as magnetics and diodes operate at higher efficiency once they have reached a steady state temperature. Testing at steady state therefore captures the in-practice performance of a ballast. (GE, Public Meeting Transcript, No. 12 at p. 82–83; NEMA, No. 15 at p. 6) Philips agreed that measurement of the ballast performance is more realistic at steady state than within one minute of energizing. (Philips, Public Meeting Transcript, No. 12 at p. 163)

DOE agrees that the lamp-based BE test procedure is simpler and more representative of ballast performance than the resistor-based method. Because a lamp does not have a short duty cycle, the lamp-and-ballast system can be operated for a long enough time to reach steady state and the ballast measurement can be representative of typical operation. In this SNOPR, DOE is proposing a BLE test procedure in which, like the BE method, the performance of a ballast is measured at steady state while operating a lamp load.

The lamp-based BE test procedure would define particular lamp and ballasts pairings for testing ballast performance. In its written comments, NEMA recommended that instant-start ballasts and programmed-rapid-start ballasts with cathode cut-out should be tested with a full wattage load. (NEMA, No. 15 at p. 6–7) In this SNOPR, DOE is proposing to pair ballasts with the most common wattage lamp for testing purposes (see section III.D.2 for additional detail). In the case of instant-start ballasts and programmed-rapid-start ballasts (with or without full cathode cut-out), DOE is proposing that these ballasts operate full-wattage lamps which are also the most common wattage in these groupings. Some ballasts, such as rapid start T12 ballasts, are paired with reduced wattage or energy saver lamps as this will be the most common pairing. The proposal for lamp-and-ballast pairing in this SNOPR is the same as discussed in the test procedure NOPR.

GE also commented on the transfer equations for BE to BEF, stating that fitting a line of best fit to tested BEF and BE data would be a reasonable method of developing a transfer equation between the two metrics. (GE, Public Meeting Transcript, No. 12 at p. 64–65) GE commented that separate empirically derived transfer equations would likely be needed for ballasts that either employ or do not employ cathode heating. (GE, Public Meeting Transcript, No. 12 at p. 65–66) At the NOPR public meeting, Philips commented that it developed correlations between BE and BEF for instant start ballasts and ballasts with cathode cutout when using the lamp-based BE test procedure. (Philips, Public Meeting Transcript, No. 12 at p. 36) NEMA commented that separate transfer equations for ballasts of different ballast factor would be unnecessary with a lamp-based BE test procedure. (NEMA, No. 15 at p. 6) The CA Utilities commented that they did not agree with using the same transfer equations for converting BE to BEF for high and low frequency ballasts because of the change in lamp efficacy. A high- and low-frequency ballast with the same BE would not have the same BEF. (CA Utilities, No. 13 at p. 2) In its written comments, NEMA stated that BEF could be calculated from BE using the reference arc power listed in ANSI C78.81–2010 [9]. NEMA suggested multiplying BE by 100, dividing by number of lamps, and dividing by the ANSI reference lamp arc power. Philips commented that this technique is based on the assumption that light output is directly proportional to arc power for all ballast types over the ballast factor range from 0.75 to 1.15. NEMA provided test data that supports this claim. NEMA also commented that the calculation favors ballasts with less cathode heating, which is consistent with the goal of promoting energy efficient systems. (NEMA, No. 29 at p. 3; NEMA, No. 15 at p. 15–16; Philips, Public Meeting Transcript, No. 12 at p. 51–53)

In the SNOPR, DOE is proposing to measure BLE directly without correlation to another metric. To convert the existing standards from BEF to BLE, however, DOE used the NEMA suggested calculation (rather than empirical correlations) to convert the existing BEF energy conservation standards to BLE standards. DOE used different conversion equations to assign the associated BLE for high- or low-frequency ballasts, in agreement with the CA Utilities' comment.

To convert from BEF to BLE, DOE multiplied the BEF values by the corresponding reference lamp arc power listed in Table III.2 and the number of lamps operated by the ballast. As described in section III.D.4, these reference arc powers originate from ANSI C78.81–2010 or IEC 60081 Ed 5.0, the results of empirical analysis performed by DOE, or scaling from a similar lamp type (as described in the next paragraph). For example, for ballasts that operate two F34T12 lamps, DOE multiplied 1.35 (BEF) by two (number of lamps) and 29.81 (high-frequency reference lamp arc power based on empirical testing) which resulted in a BLE of 80.5%. To convert the same BEF to a low-frequency equivalent BLE, DOE multiplied 1.35 by two (number of lamps), 32 (low-frequency reference lamp arc power), and 0.9 (lamp operating frequency adjustment factor) which resulted in a BLE of 77.8%. Table III.1 lists the existing standards and their corresponding values in BLE using the methodology described in this paragraph.

DOE did not have high-frequency ANSI reference specifications or empirical data for F40T12 or F96T12 lamps. To estimate high-frequency lamp arc powers for the F40T12 lamp, DOE scaled the low-frequency ANSI-based F40T12 reference power using the ratio of high-frequency to low-frequency reference powers for the F34T12 lamp. For the F96T12 lamp, DOE used the same methodology using the ratio of high- to low-frequency reference power for the F96T12/ES lamp to scale the low-frequency ANSI-based F96T12 reference power to high-frequency.

TABLE III.1—EXISTING BEF STANDARDS AND CORRESPONDING BLE CONVERSION

Ballasts that operate:	Ballast input voltage	Total nominal lamp watts	Ballast efficacy factor	BLE Low-frequency	BLE High-frequency
One F40T12 lamp	120/277	40	2.29	80.4	83.2
Two F40T12 lamps	120/277	80	1.17	82.1	85.0
Two F96T12 lamps	120/277	150	0.63	85.1	89.7
Two F96T12HO lamps	120/277	220	0.39	74.4	78.0
One F34T12 lamp	120/277	34	2.61	75.2	77.8

[9] American National Standard for Electric Lamps—Double-Capped Fluorescent Lamps—Dimensional and Electrical Characteristics, Approved January 14, 2010.

TABLE III.1—EXISTING BEF STANDARDS AND CORRESPONDING BLE CONVERSION—Continued

Ballasts that operate:	Ballast input voltage	Total nominal lamp watts	Ballast efficacy factor	BLE Low-frequency	BLE High-frequency
Two F34T12 lamps	120/277	68	1.35	77.8	80.5
Two F96T12/ES lamps	120/277	120	0.77	83.9	88.4
Two F96T12/HO/ES lamps	120/277	190	0.42	68.0	71.3

While DOE is proposing the BLE metric in this SNOPR, DOE also proposes a method for calculating ballast factor of a ballast by dividing the measured lamp arc power on the test ballast by the measured lamp arc power on a reference ballast. In some cases, when reference ballast operating conditions are unavailable, the SNOPR provides a reference lamp power from an ANSI standard or from empirical results. As described in the preliminary analysis of the fluorescent lamp ballast standards rulemaking, DOE is considering categorizing ballasts into different groups (product classes) based on ballast factor. These product classes could then be subject to different energy conservation standards. DOE could use the ballast factor measurement in this test procedure to assign a ballast to a particular product class. See section III.D.4 for additional detail on the ballast factor calculation.

In commenting on the lamp-based BE procedure, which is similar to the suggested lamp-based BE test procedure outlined in the NEMA Alternative Test Procedure Handout, Philips indicated that the NEMA procedure was only valid for instant-start ballasts and programmed-start ballasts with full cathode cutout. Philips stated that NEMA had not completed enough due diligence for ballasts with cathode heating to make a proposal. Philips indicated that the existing light output based procedure could be used for ballasts without cathode heating. Philips also commented that DOE could make the assumption in the test procedure to include cathode heating as ballast losses and account for this difference in the energy conservation standard. (Philips, Public Meeting Transcript, No. 12 at p. 36, 38, 47, 65, 71–72) Then, in written comments, NEMA provided supplemental information suggesting a modification to the test setup to support ballasts that employ cathode heating. NEMA indicated that two 1,000 ohm resistors should be placed in parallel with both sets of lamp pins, generating a midpoint from which to measure the lamp discharge voltage. NEMA also noted that the resistors are of high enough impedance not to affect the lamp operating characteristics and low enough impedance not to affect the measurement system. (NEMA, No. 15 at p. 7) In response to the original NEMA proposal that was applicable only to ballasts without cathode heating, NEEA and NPCC commented that they do not support a test procedure that is only applicable to certain ballasts. (NEEA & NPCC, No. 16 at p. 3–4) NEEA and NPCC commented that the existing test procedure for BEF applies equally well to all ballast types, which is not the case for the lamp-based BE alternative, the NOPR resistor-based BE proposal, or the procedure as outlined in the NEMA Alternative Test Procedure Handout. GE commented that the use of more than one test procedure for ballasts subject to the same energy conservation standard was not desirable. (GE, Public Meeting Transcript, No. 12 at p. 97–98)

DOE agrees that the test procedure for fluorescent lamp ballasts should be applicable to all ballasts subject to the same standards. DOE believes that the test setup with resistors in parallel with the lamp pins would allow for repeatable BE measurements, as well as BLE measurements, for rapid- and programmed-start ballast regardless of the level of cathode heating. Rather than require the ballast to be tested to determine the level of cathode heating, DOE would use the voltage divider for all rapid- and programmed-start ballasts. The voltage divider would provide a position in the circuit to measure the lamp arc voltage assuming the arc begins near the center of the ballast. This is in contrast to a setup without the divider when lamp arc voltage would vary depending on the position of the hotspot on each electrode. As a result, DOE believes that NEMA's suggested test setup augments the BE procedure, and the proposed BLE procedure, such that both procedures are applicable to all ballasts.

3. Improved Light-Output-Based Test Procedure

In the NOPR, DOE considered improving the existing light-output based test procedure to reduce measurement variation. The measurement variation in the existing procedure can be attributed to operating conditions, variation in measured power of reference lamps, inconsistent output power measurements in determining ballast factor, and ambient temperature. DOE invited comment on the clarified methodologies and tighter tolerances for temperature and reference lamp measured power.

The CA Utilities commented that they supported the improvements to the existing test procedure presented in the NOPR to reduce measurement variation, including tightening reference lamp tolerance, requiring uniform operating conditions, taking measurements at constant voltage (consistent with the general service fluorescent lamps test procedure listed in 10 CFR part 430 appendix R to subpart B), using only one approach for calculating BF, and testing universal voltage commercial ballasts at 277V and residential universal voltage ballasts at 120V. (CA Utilities, No. 13 at p. 2) NEEA and NPCC also supported the improvements to the existing test procedure with the exception of the ambient temperature specification, which they believed would be extraordinarily costly. NEEA and NPCC preferred the improved light-output-based method to all other test procedure proposals. (NEEA & NPCC, No. 16 at p. 1–3) NEEA and NPCC also commented that DOE should test the proposed changes with a large sample size so that statistics such as standard deviation can be computed. NEEA and NPCC commented that this data is needed to judge the existing test procedure against the proposed amendment and alternatives. (NEEA & NPCC, No. 16 at p. 3) General Electric (GE), Philips, and NEMA agreed that controlling a photometric laboratory to 25 °C ± 0.5 °C is a significant undertaking and would require upgrades of the air conditioning and air handling controls and could require some specialized equipment. (GE, Public Meeting Transcript, No. 12 at p. 59, 105; Philips, Public Meeting Transcript, No. 12 at p. 60–61; NEMA, No. 15 at p. 7) Philips and NEMA also commented that decreasing the tolerance on reference lamps would significantly increase the burden in identifying reference lamps compared to the already difficult process of meeting

the current specification. (Philips, Public Meeting Transcript, No. 12 at p. 60–61; NEMA, No. 15 at p. 7–8) NEEA and NPCC disagreed with NEMA on the issue of reference lamp variation, commenting that while the process of identifying reference lamps is tedious, they did not see any reason why this technique introduced unmanageable variation into the test process. (NEEA & NPCC, No. 16 at p. 2) GE commented that the BEF metric is based heavily on the input power to the ballast. However, a vast majority of the input power is dependent on the lamp, and the ballast manufacturer has no control over this lamp power. As a result, input power and BEF will vary in response to the measured power of the lamp, potentially making high performance ballasts look less efficient. Furthermore, the BEF test procedure, as defined, contains some latitude that permits variation between test laboratories. (GE, Public Meeting Transcript, No. 12 at p. 35–36)

DOE agrees that a tighter tolerance on ambient temperature would be more burdensome to manufacturers, though it would decrease measurement variation. DOE also believes that tightening the tolerance on reference lamp measured power would increase the burden for lamp identification because fewer lamps would meet the more stringent specification. While DOE agrees with NEEA and NPCC that the process of identifying reference lamps can be accurately carried out at any test laboratory, because a reference lamp can vary in measured power up to plus or minus 2.5% of the rated lamp power (existing requirements) or up to 1% in the improved light output based test procedure, the permitted variation in measured power introduces variation into the BEF metric. The same ballast paired with reference lamps of different measured power will measure different ballast input power, impacting the value of BEF. All other procedural improvements and clarifications including requiring uniform operating conditions, taking measurements at constant voltage, using only one approach for calculating BF, and testing universal voltage commercial ballasts at 277V and residential universal voltage ballasts and cold-temperature sign ballasts at 120V would reduce testing variation without appreciably increasing testing burden. DOE does not plan to investigate the improved light output based test procedure through testing because it believes BLE to be a better metric and test procedure. DOE believes its proposal of BLE is less burdensome than an improved light-output based method, potentially reduces measurement variation to a greater extent, and generates a straightforward descriptor of electrical losses. The BLE measurement and calculation also minimize the impact of lamp measured power variation. Therefore, DOE believes there is minimal benefit to requiring a tighter tolerance on reference lamp power variation in the context of the proposed test procedure.

Because discrepancies may exist in BEF test data from different sources, NEEA and NPCC suggested that any changes to the existing test procedure should place ballasts both above and below the mean values, not systematically generate tested performance above the mean. (NEEA & NPCC, No. 16 at p. 6) GE commented that the discrepancies in data could signify a compliance problem and that manufacturers should notify DOE of observed instances of non-compliance. GE also indicated that manufacturers may shop around at different laboratories to find an improvement in ratings. (GE, Public Meeting Transcript, No. 12 at p. 35, 172–173) Philips commented that variation in test data between different sources should be expected given the variation in the underlying measurement technique. (Philips, Public Meeting Transcript, No. 12 at p. 162–164, 173–174)

DOE understands that the existing test procedure has some latitude in its definition in that several slightly different setups (lamp operating conditions, reference lamps) and conditions are permitted. Even the improved light-output-based procedure with its procedural clarifications still allows a ballast to be tested with reference lamps of slightly different measured power. These light-output-based procedures and the BEF metric could allow for a systematic bias as GE indicated at the NOPR public meeting. DOE believes that the proposal in today's SNOPR of BLE limits the impact of reference lamp measured power on the efficiency descriptor for fluorescent lamp ballasts and provides a clearly defined procedure that limits procedural variations from test facility to test facility. The BLE metric is more robust to changes in reference lamp measured power because variations in lamp power generally have a proportional effect on both the input power and lamp arc power measurements (numerator and denominator, respectively).

Philips commented that BEF can only be used to compare ballasts of similar light output. For example, T5 standard output and T8 ballasts cannot be compared using BEF because of their different system lumen outputs. (Philips, Public Meeting Transcript, No. 12 at p. 50, 70–71) DOE agrees that BEF cannot be used to compare ballasts that are part of systems with different light output. The measurement of ballast luminous efficiency proposed in this SNOPR can be used to compare ballasts that are part of systems with different light output.

4. Relative System Efficacy

In the NOPR, DOE considered a test procedure to measure the relative system efficacy of fluorescent lamp ballasts. RSE is intended to normalize the existing metric of BEF to rated lamp efficacy to make it more comparable across different lamp-and-ballast systems. DOE received comment from some interested parties regarding potential problems and benefits resulting from the use of RSE.

The CA Utilities supported the normalization of BEF to RSE to allow better comparison between ballasts that operate different numbers of lamps. The CA Utilities recommended measuring BE, converting to BEF, and finally converting to RSE or measuring BEF directly using light output based measurements. The CA Utilities also commented that RSE is more useful than BEF for designing and implementing rebate programs. (CA Utilities, No. 13 at p. 3; CA Utilities, Public Meeting Transcript, No. 12 at p. 41, 53–54, 67–68) Lutron and NEMA commented that if RSE is based on photometric measurements, then RSE will suffer from the same variation as the existing test procedure. (Lutron, Public Meeting Transcript, No. 12 at p. 51, 54; NEMA, No. 15 at p. 14) Philips commented that though RSE may allow for greater comparability of losses among the product classes considered in the preliminary analysis, these different categories of ballasts may need to be subject to different standards. As the ballast operates increased wattage loads, efficiency generally increases. As a result, RSE would not automatically reduce the number of product classes. (Philips, Public Meeting Transcript, No. 34 at p. 54–55) NEEA and NPCC disagreed with the use of RSE, commenting that the utility of RSE may be minimal to the lighting designer. The lighting designer is interested in room cavity ratio, fixture efficiency, fixture spacing, and other factors for meeting a lumen per unit area requirement and not for a one or two percent efficiency difference in the ballast. (NEEA & NPCC, Public Meeting Transcript, No. 12 at p. 72–73) Philips and NEMA commented that a lighting designer might prefer BEF to RSE because BEF can be used directly to convert to

system lumen output while RSE must first be converted to BEF. (Philips, Public Meeting Transcript, No. 12 at p. 73; NEMA, No. 15 at p. 13) The CA Utilities commented that a more understandable efficiency metric will help lighting designers with less expertise make better decisions when specifying the ballasts for their lighting systems. (CA Utilities, Public Meeting Transcript, No. 12 at p. 76)

Philips and NEMA commented that while RSE does give a set of numbers that are easier to understand and can be compared for ballasts operating the same lamp type, test data cannot be compared for different lamp types. (Philips, Public Meeting Transcript, No. 12 at p. 54; NEMA, No. 15 at p. 8, 14) NEMA also commented that another problem with RSE is that the four foot MBP lamp is referenced at 60 Hz. Therefore, the rated wattage of 32.5 watts (W) only corresponds to a low-frequency ballast operating at ballast factor of one. A high-frequency ballast operating at ballast factor of one will require less than 32.5 W. Because RSE is defined as BEF divided by one hundred and multiplied by the total rated lamp power of the system, RSE normalizes low- and high-frequency four foot MBP T8 systems with the same factor. (NEMA, Public Meeting Transcript, No. 12 at p. 55) Philips commented that because of the difference in the rated lamp power used to normalize the values, comparison of four foot T8 high-frequency ballasts to four foot T5 high-frequency ballasts is inappropriate. (Philips, Public Meeting Transcript, No. 12 at p. 68–69, 101)

Though RSE could be modified such that BEF is normalized with a rated power at the appropriate frequency, DOE believes that BLE has many advantages to RSE. The BLE metric is measured directly with electrical measurements and can be used to compare the efficiency of ballasts that operate different numbers of lamps and different types of lamps. The straightforward definition of BLE and its wide range of comparability should help inexperienced lighting designers select more efficient ballasts for their lighting systems to the same or greater extent than the use of RSE.

5. Dimming Ballast Test Procedure

In the NOPR, DOE requested comment on potential test procedures for dimming ballasts in the event they were added to the scope of coverage in the fluorescent lamp ballast standards rulemaking. Philips commented that testing a dimming ballast at full light output may be misleading because a dimming ballast may have a different efficiency at reduced light levels than at full light output. Furthermore, a practicable method of characterizing the overall efficiency of a dimming ballast had not yet been identified. (Philips, Public Meeting Transcript, No. 12 at p. 122–124) NEMA also commented in response to the energy conservation standard that it has not conducted sufficient analysis to determine the appropriate light level at which to test dimming ballasts and that testing at multiple light levels would be burdensome. (NEMA, No. 29 at p. 2 [10]) In written comments in response to the test procedure NOPR, NEMA indicated that testing a dimming ballast at full light output was acceptable so long as energy conservation standards were adjusted appropriately—similar to standards for programmed start versus instant start ballasts. (NEMA, No. 15 at p. 4–5) Because DOE is not currently considering dimming ballasts in the scope of coverage in the energy conservation standard, DOE is also not developing a test procedure for these ballasts. If the scope of coverage later includes dimming ballasts, DOE would consider NEMA's comment in development of a dimming ballast test procedure.

D. Test Procedure Proposal

DOE is proposing a test procedure for the measurement of ballast luminous efficiency (BLE) using electrical measurements of a lamp-and-ballast system. This proposal is based on a test procedure developed by NEMA and considered in the NOPR to measure lamp-based BE and correlate the result to BEF. The proposal includes a calculation of ballast factor without photometric measurements and a repeatable method of measuring lamp arc power for systems with cathode heating. The proposed method also includes a modification to the calculation of the BE efficiency metric to incorporate an element of system efficacy.

In sections 1 through 4 that follow, DOE discusses the language proposed for a new appendix Q1 to subpart B of 10 CFR part 430 (hereafter "appendix Q1"). The new appendix Q1 would contain the new test procedure for the measurement of BLE that would be used for demonstrating compliance with any future amended standards. DOE proposes that use of the test procedure would be required upon the effective date of any amended energy conservation standards for fluorescent lamp ballasts. In section 5, DOE describes an update to the existing test procedure in appendix Q to subpart B of 10 CFR part 430. The change to appendix Q updates an industry reference from ANSI C82.2–1984 to the current ANSI C82.2–2002. DOE would retain the existing BEF test procedure for compliance with existing standards. In section 6, DOE discusses proposed amendments regarding references to ANSI C82.2–2002.

1. Test Conditions

The test conditions required in the SNOPR are unchanged from the NOPR proposal. DOE proposes that testing be conducted at 25 degrees Celsius ± 2.0 degrees and in a draft-free environment according to ANSI C78.375–1997 [11]. These conditions provide for mostly uniform electrical operating characteristics for the lamp-and-ballast system. In addition, DOE proposes that ballasts be tested using the electrical supply characteristics found in section 4 of ANSI C82.2–2002 with the following changes: (1) Ballasts capable of operating at a single voltage would be tested at the rated ballast input voltage; (2) users of universal voltage ballasts would disregard the input voltage directions in section 4.1 of ANSI C82.2–2002 that indicate a ballast capable of operating at multiple voltages should be tested at both the lowest and highest USA design center voltage; and (3) manufacturers use particular revisions to the normative references associated with ANSI C82.2–2002 (see section III.D.6 for additional detail). Instead of testing universal voltage ballasts at the voltages indicated in ANSI C82.2–2002, DOE believes that testing ballasts at a single voltage is more appropriate and less burdensome. DOE believes 277 V is the most common input voltage for commercial ballasts and that 120 V is the most common for residential ballasts and commercial cold-temperature outdoor sign ballasts. Therefore, DOE proposes that all universal voltage commercial ballasts be tested at 277 V and that universal voltage residential and commercial cold-temperature outdoor sign ballasts be tested at 120 V.

2. Test Setup

For the BLE measurements, DOE proposes in this SNOPR that the fluorescent lamp (ballast load) be mounted in a standard strip fixture with lamps facing upward to minimize self-heating according to ANSI C82.1–

[10] This written comment was submitted to the docket of the fluorescent lamp ballast standards rulemaking [Docket No. EERE–2007–BT–STD–0016; RIN 1904–AB50).

[11] "American National Standard for Fluorescent Lamps—Guide for Electrical Measurements," approved September 25, 1997.

2004 [12] and C78.81–2010. The fluorescent lamp should be seasoned for at least twelve hours and be tested to be electrically stable and meet reference lamp conditions as defined in ANSI C82.13–2005.[13] The ballast can be placed on the test bench and the fixture should be electrically connected to the ballast case and to earth ground. The ballast wire lengths would be as specified in the manufacturer's catalog and not bundled or coiled to minimize capacitive and inductive effects. If the wire lengths supplied by the manufacturer are of insufficient length to reach both ends of lamp, additional wire may be added. The minimal additional wire length necessary would be added, and the additional wire would be the same wire gauge as the wire supplied with the ballast. If no wiring is provided with the ballast, DOE proposes 18 American wire gauge (AWG) or thicker wire should be used. The wires would be separated from each other and ground to prevent parasitic capacitance for all wires used in the apparatus, including those wires from the ballast to the lamps and from the lamps to the measuring devices. The test fixture would be wired with 18 AWG solid conductor wire. All wires in the fixture would be kept loose and not bundled or taped to the fixture metal, representing common wiring setups in practice. The ballast under test may be connected to the fixture through a terminal strip mounted on the side of the fixture or may be directly connected. The ballast would be wired to the lamps in the fixture according to the manufacturer's wiring instructions.

As previously proposed in the NOPR, instrumentation for current, voltage, and power measurements would be selected in accordance with ANSI C78.375–1997 [14] Section 9, which specifies that instruments should be "of the true RMS type, essentially free from wave form errors, and suitable for the frequency of operation." DOE would further specify instrument performance within the guidelines of the ANSI C78.375–1997 and ANSI C82.2–2002. Specifically, lamp arc current would be measured using a galvanically isolated current probe/monitor with frequency response between 40 Hertz (Hz) and 20 MHz. In addition, lamp arc voltage and input voltage would be measured directly by a power analyzer with a maximum 100 picofarad (pF) capacitance to ground and with frequency response between 40 Hz and 1 MHz. Coaxial cables would not be used due to the excessive capacitance associated with this wiring. The input current may be measured either with the internal shunt of a power analyzer or with an external current transducer specifically calibrated with the power analyzer.

For the lamp arc current measurement, the galvanically isolated current probe must be calibrated with the power analyzer. Furthermore, the current transducer ratio must be set in the analyzer to match the transducer to the analyzer. The output from non-invasive current transducers is usually a low voltage signal, so the actual current to voltage ratio to the power analyzer must consider the losses in addition to the transducer ratio. Therefore, the full current to voltage ratio (transducer ratio) includes the voltage divider effect between the transducer and the power analyzer input. Assuming both the power analyzer and non-invasive current transducer are properly calibrated, the actual current to voltage ratio to use to fully correct the measurement is as described in equation 1.

$$\text{Full Transducer Ratio} = \frac{I_{in}}{V_{out}} \times \frac{R_{in}}{R_{in} + R_s} \qquad \text{Equation 1}$$

I_{in} = Current through the current transducer
V_{out} = Voltage out of the transducer
R_{in} = Power analyzer impedance
R_s = Current transducer output impedance

The test setup would be different depending on the ballast starting method. As discussed in section III.C.2 and depicted in Figure III.2, rapid- and programmed-start ballast test setups would include two 1000 ohm resistors placed in parallel with both sets of lamp pins. This voltage divider provides a midpoint from which to measure the lamp arc voltage, minimizing the impact of cathode heating. Instant-start ballasts would not employ a voltage divider, but would require a jumper wire or an adapter to connect to lamps with two pins per electrode.

[12] "American National Standards for Lamp Ballast—Line Frequency Fluorescent Lamp Ballast," approved November 19, 2004.

[13] "American National Standard for Lamp Ballasts—Definitions—for Fluorescent Lamps and Ballasts," approved July 23, 2002.

[14] "American National Standard for Fluorescent Lamps—Guide for Electrical Measurements," approved September 25, 1997.

Figure III.2 Programmed- and Rapid-Start Ballast Instrumentation Setup

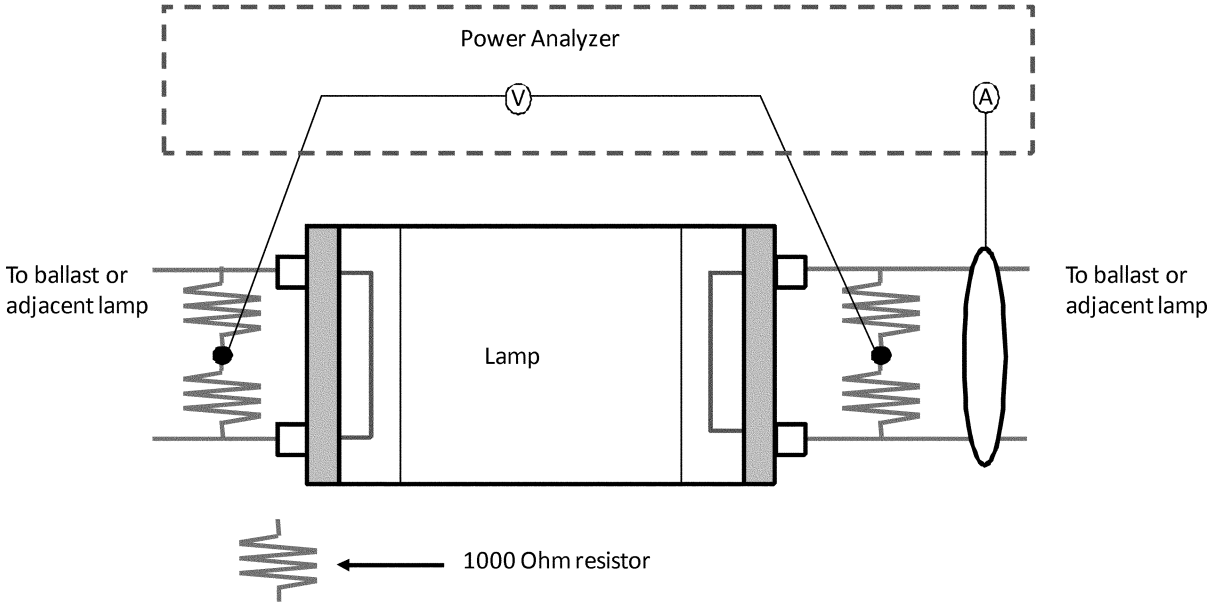

DOE proposes that the power analyzer voltage leads be attached to the wires leading to and from the main power source for input voltage measurements and that the current probe be placed around the same wires for input current. The power analyzer should have at least one channel per lamp plus one additional channel for the ballast input power measurement. Figure III.3 shows the instrumentation placement for the lamp arc power measurement for programmed- and rapid-start ballasts with full cathode cutout, and Figure III.4 and Figure III.5 show the placement for instant-start ballasts.

Figure III.3 Full Cathode Cut-out Programmed- and Rapid-Start Ballast Instrumentation Setup

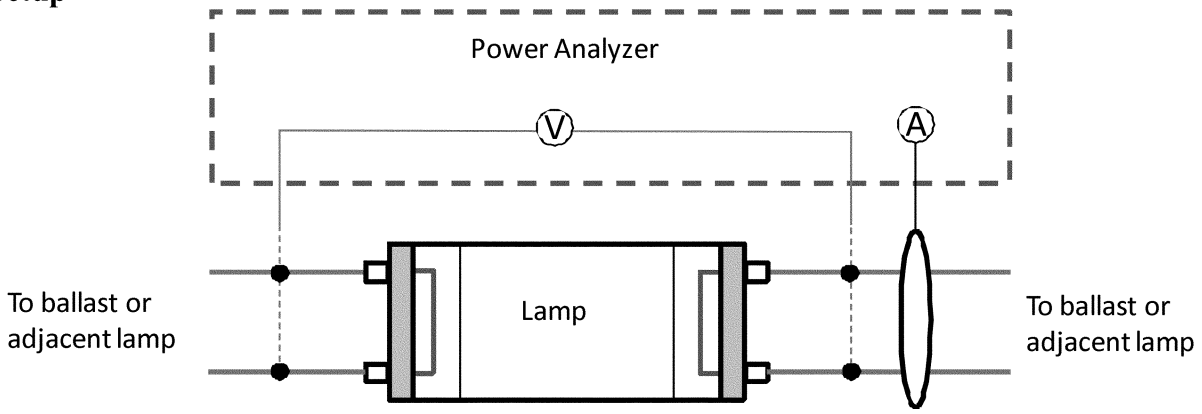

Figure III.4 Instant-Start Ballasts that Operate MBP, mini-BP, and RDC Lamps Instrumentation Setup

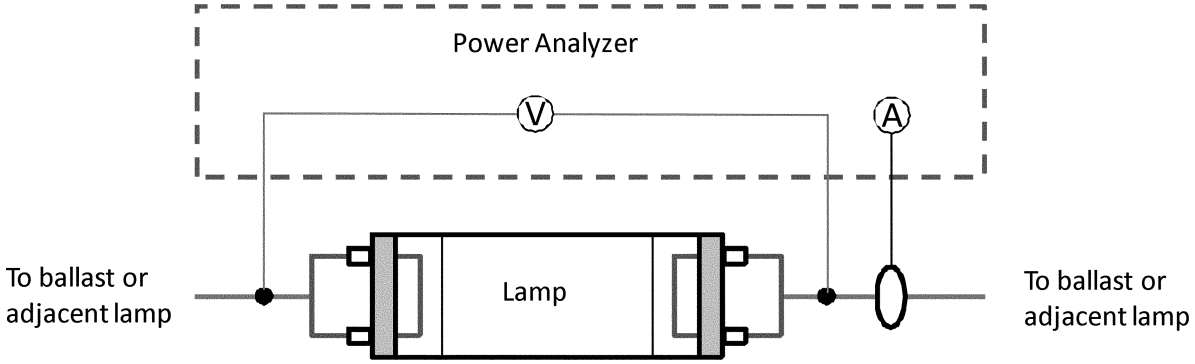

Figure III.5 Instant-Start Ballasts that Operate SP Lamps Instrumentation Setup

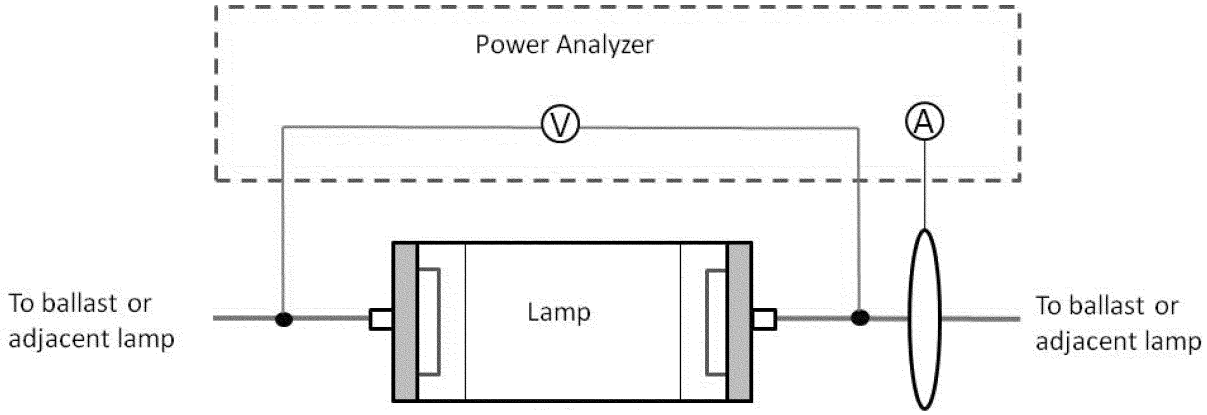

As discussed in the NOPR, DOE proposes that the ballasts be tested with the most common wattage lamp operated by the ballast. In many cases, a ballast can operate several reduced wattage lamps in addition to the most common variety. For example, ballasts designed to operate four-foot MBP T8 lamps can operate 32 W, 30 W, 28 W, and 25 W lamps. To test every lamp-and-ballast combination would impose a significant burden on manufacturers. Thus, to mitigate the testing burden on manufacturers, the proposed test procedure would require only one lamp-and-ballast combination to be tested in each product class. Therefore, DOE proposes a test procedure based on the ballast operating the most common lamp wattage, resulting in a ballast luminous efficiency that represents the way the product is primarily used in the market. Table III.2 indicates the nominal lamp wattage that would be paired with a ballast for testing.

TABLE III.2—BALLAST AND LAMP PAIRINGS

Ballast type	Nominal lamp wattage	Lamp diameter and base	Reference lamp arc power	
			Low-frequency	High-frequency
Ballasts that operate one, two, three, four, five, or six straight-shaped lamps (commonly referred to as 4-foot medium bipin lamps) with medium bipin bases, a nominal overall length of 48 inches, a rated wattage of 25 W or more, and an input voltage at or between 120 V and 277 V.	32 34	T8 MBP ..... T12 MBP	30.8 32	29 *29.81
Ballasts that operate one, two, three, four, five, or six U-shaped lamps (commonly referred to as 2-foot U-shaped lamps) with medium bipin bases, a nominal overall length between 22 and 25 inches, a rated wattage of 25 W or more, and an input voltage at or between 120 V and 277 V.	32 34	T8 MBP ..... T12 MBP	30.8 32	29 *29.81
Ballasts that operate one or two rapid-start lamps (commonly referred to as 8-foot high output lamps) with recessed double contact bases, a nominal overall length of 96 inches and an input voltage at or between 120 V and 277 V.	86 95	T8 HO RDC T12 HO RDC	N/A 90	86 *84.88
Ballasts that operate one or two instant-start lamps (commonly referred to as 8-foot slimline lamps) with single pin bases, a nominal overall length of 96 inches, a rated wattage of 52 W or more, and an input voltage at or between 120 V and 277 V.	59 60	T8 slimline SP. T12 slimline SP.	60.1 60.5	57 *56.91

TABLE III.2—BALLAST AND LAMP PAIRINGS—Continued

Ballast type	Nominal lamp wattage	Lamp diameter and base	Reference lamp arc power	
			Low-frequency	High-frequency
Ballasts that operate one or two straight-shaped lamps (commonly referred to as 4-foot miniature bipin standard output lamps) with miniature bipin bases, a nominal length between 45 and 48 inches, a rated wattage of 26 W or more, and an input voltage at or between 120 V and 277 V.	28	T5 SO Mini-BP.	N/A	27.8
Ballasts that operate one, two, three, or four straight-shaped lamps (commonly referred to as 4-foot miniature bipin high output lamps) with miniature bipin bases, a nominal length between 45 and 48 inches, a rated wattage of 49 W or more, and an input voltage at or between 120 V and 277 V.	54	T5 HO Mini-BP.	N/A	53.8
Ballasts that operate one, two, three, or four straight-shaped lamps (commonly referred to as 4-foot medium bipin lamps) with medium bipin bases, a nominal overall length of 48 inches, a rated wattage of 25 W or more, an input voltage at or between 120 V and 277 V, a power factor of less than 0.90, and that are designed and labeled for use in residential applications.	32 34	T8 MBP ..... T12 MBP	30.8 32	29 *29.81
Ballasts that operate one, two, three, four, five, or six rapid-start lamps (commonly referred to as 8-foot high output lamps) with recessed double contact bases, a nominal overall length of 96 inches, an input voltage at or between 120 V and 277 V, and that operate at ambient temperatures of 20 °F or less and are used in outdoor signs.	86 110	T8 HO RDC T12 HO RDC	N/A 106	86 *100.03

MBP, Mini-BP, RDC, and SP represent medium bipin, miniature bipin, recessed double contact, and single pin, respectively.
* Empirically derived.

DOE also found that ballasts are capable of operating fewer than the maximum number of lamps they are designed to operate. For example, a ballast designed to operate four lamps can also operate two or three lamps. However, DOE understands that ballasts are typically paired with the maximum number of lamps they are designed to operate. As discussed in the NOPR, DOE proposes to test fluorescent lamp ballasts only while operating the maximum number of lamps for which they are designed to operate. DOE believes this proposal both reduces testing burden and assesses the performance of the ballast in its primary and most common configuration.

3. Test Method

Once the lamp-and-ballast system is connected and attached to the measurement instrumentation, DOE proposes that the ballast operate a fluorescent lamp for a minimum of fifteen minutes to a maximum of one hour until stability is reached. DOE notes that the NEMA Test Procedure Handout indicated stability should be determined in accordance with ANSI C78.375–1997. DOE found the specifications in this standard to be unclear. To further specify the determination of stabilization, DOE proposes that measurements of lamp arc voltage, lamp arc current, lamp arc power be taken every one second during the stabilization period. Once the percent difference between the minimum and maximum values for voltage, current, and power do not exceed one percent over a four minute moving window, the system would be considered stable. Allowing the lamp and ballast system to reach its steady state operating point will provide a more accurate assessment of ballast performance in the field. If the system does not stabilize, a new ballast sample would be selected and the test would be repeated.

After the system has stabilized, DOE proposes that the measured input parameters be voltage (RMS [15]), current (RMS), power, and power factor measured in accordance with ANSI C82.2–2002. The measured output parameters would include lamp arc voltage, current, and power. Lamp arc current and voltage measurements would be taken at the specified locations according to the test setup. Frequency of the output waveform delivered to the lamp by the ballast should also be measured.

4. Calculations

As described in Equation 2 below, ballast luminous efficiency is equal to total lamp arc power, divided by ballast input power, multiplied by 100, and then multiplied by 0.9 for ballasts that operate lamps at low-frequency.

$$\text{Ballast Luminous Efficiency} = \frac{\text{Total Lamp Arc Power}}{\text{Ballast Input Power}} \times 100 \times \beta \qquad \text{Equation 2}$$

The symbol β is equal to 0.9 for low-frequency ballasts and is equal to 1.0 for high-frequency ballasts.

DOE is also proposing a method of calculating ballast factor to potentially be used in the fluorescent lamp ballast standards rulemaking to assign a ballast to a particular product class. The method specifies dividing the measured lamp arc power on the test ballast by the measured lamp arc power on a reference ballast. The reference lamp arc power will be the measured power determined during reference lamp identification in accordance with ANSI C78.375–2010, ANSI C78.81–2010, and ANSI C82.3–2002. Reference lamp measured power can change over time which could impact the BF calculation. Increasing the frequency of the reference lamp measurement could lead to increased ballast factor calculation accuracy with slightly increased testing burden. DOE proposes that the reference lamp arc

[15] Root mean square (RMS) voltage is a statistical measure of the magnitude of a voltage signal. RMS voltage is equal to the square root of the mean of all squared instantaneous voltages over one complete cycle of the voltage signal.

power should be measured once every 24 hours for ballast factor calculation. DOE invites comment on the frequency at which the reference lamp power should be measured on the reference ballast.

Some lamp types do not have reference ballast operating conditions defined for both high- and low-frequency operation. In these cases, DOE has provided reference ballast lamp arc powers based on lamp operating conditions in ANSI C78.81–2010 or IEC 60081 Ed 5.0, or as derived by DOE. DOE empirically derived high-frequency F34T12, F96T12/ES, F96T12HO/ES, and F96T12HO lamp arc wattage by measuring lamp current and voltage when the lamp emanated the equivalent lumen output to the low-frequency light output at ANSI reference conditions.

As discussed in section III.C.2, NEMA provided evidence in its written comments that light output is directly proportional to lamp arc power for the ballast factor range of 0.75 to 1.15. Outside this range, the relationship starts to become nonlinear, but DOE believes the assumption of a linear relationship to still be reasonable for the purpose of assigning ballast factor for classification purposes. DOE notes that the method of measuring ballast factor using fixed reference ballast lamp arc powers may be more susceptible to reference lamp measured power variation than a method that measures lamp arc power on both the test and reference ballast. This is because a measured value (tested lamp arc power) is being compared to a constant value (reference lamp arc power from ANSI C78.81–2010 or IEC 60081 Ed. 5.0) rather than to another measured value using the same lamp. This variation will not impact the measured BLE value, but could affect the standard to which the ballast is subject. DOE invites comment on the impact of variation in the proposed ballast factor calculation for certain lamp and ballast systems at certain operating frequencies.

5. Updates to Existing Test Procedure

DOE is not changing the proposed updates to the existing test procedure from the NOPR in this SNOPR. DOE would update the references to ANSI standards for the existing light-output-based test procedure. NEMA commented that DOE should use the latest versions of ANSI C82.2, C82.11, and C82.1 at the time of finalized rulemaking. (NEMA, No. 15 at p. 4, Philips, Public Meeting Transcript, No. 12 at p. 36–37) DOE would use the most recent versions of these standards, namely ANSI C82.2–2002, ANSI C82.11–2002,[16] and ANSI C82.1–2004. The amendments to the existing test procedure in Appendix Q to Subpart B of 10 CFR part 430 would be effective 30 days after publication of any test procedure final rule.

6. Normative References for ANSI C82.2–2002

DOE is not changing its proposals regarding the specification of normative references to be used with ANSI C82.2–2002 from the NOPR in this SNOPR. DOE is proposing amendments to the fluorescent lamp ballast test procedure that would incorporate references to ANSI C82.2–2002 into appendix Q and appendix Q1. In examining the ANSI standard, DOE found that within ANSI C82.2–2002, there are references to other ANSI standards. In particular, section 2 of ANSI C82.2–2002 states that "when American National Standards referred to in this document [ANSI C82.2–2002] are superseded by a revision approved by the American National Standards Institute, Inc. the revision shall apply." Revisions to these normative standards could potentially impact compliance with energy conservation standards by changing the tested value for energy efficiency. Therefore, DOE would specify the particular versions of the ANSI standards that would be used in conjunction with ANSI C82.2–2002. DOE proposes to use ANSI C78.81–2010, ANSI C82.1–2004, ANSI C82.11–2002, and ANSI C82.13–2002 in support of ANSI C82.2–2002. All other normative references would be as directly specified in ANSI C82.2–2002. These specifications would apply to the ANSI C82.2–2002 references in Appendix Q and to the ANSI C82.2–2002 references in Appendix Q1.

E. Burden To Conduct the Proposed Test Procedure

EPCA requires that "[a]ny test procedures prescribed or amended under this section shall be reasonably designed to produce test results which measure energy efficiency, energy use * * * or estimated annual operating cost of a covered product during a representative average use cycle or period of use * * * and shall not be unduly burdensome to conduct." (42 U.S.C. 6293(b)(3)). Today's proposed test procedure measures the performance of a ballast by computing the ratio of lamp arc power to ballast input power and adjusting for lamp operating frequency. The proposal is less burdensome than the existing procedure largely because of the simplicity of electrical measurements compared to photometric measurements. In addition, the lamp loads proposed in the SNOPR are less expensive than precision resistor loads proposed in the NOPR and are already a common item used in test facilities. The assessment of testing burden is discussed in more detail with reference to small businesses in section IV.C.

To further ensure that the test procedure proposed in this SNOPR is not unduly burdensome to conduct, DOE is not proposing any changes to the minimum sample size (four) for generating a reported value or to the reported value itself. Currently, to demonstrate compliance with energy conservation standards, manufacturers must first test four examples of the basic model. The reported value of BLE is then equal to either the lower 99% confidence interval limit divided by 0.99 or the mean of the four values, whichever is smaller. DOE received comment from NEMA supporting the reported value as currently defined in 10 CFR 430.24. (NEMA, No. 15 at p. 3) NEEA and NPCC also supported DOE using a statistically valid method of reporting efficiency of a ballast. (NEEA & NPCC, Public Meeting Transcript, No. 12 at p. 175–176) In addition, Philips, GE, and OSI commented that an increase in the minimum number of samples to ten or twenty samples from 70 categories of ballasts would be burdensome as each test takes two to three hours. (Philips, Public Meeting Transcript, No. 12 at p. 177–178; OSI, Public Meeting Transcript, No. 12 at p. 178; GE, Public Meeting Transcript, No. 12 at p. 178)

F. Impact on Measured Energy Efficiency

In any rulemaking to amend a test procedure, DOE must determine "to what extent, if any, the proposed test procedure would alter the measured energy efficiency * * * of any covered product as determined under the existing test procedure." (42 U.S.C. 6293(e)(1)) If DOE determines that the amended test procedure would alter the measured efficiency of a covered product, DOE must amend the applicable energy conservation standard accordingly. (42 U.S.C. 6293(e)(2)) This proposed active mode test procedure would change the metric used to describe in the energy efficiency of a ballast. DOE is currently amending energy conservation standards for fluorescent lamp ballasts in the fluorescent lamp ballast standards rulemaking. In that rulemaking, DOE is

[16] "American National Standards for Lamp Ballasts—High Frequency Lamp Ballasts—Supplements," approved January 17, 2002.

considering standards based on the measured efficiency of the ballast in accordance with the test procedure proposed in this active mode test procedure rulemaking consistent with 42 U.S.C. 6293(e)(2). DOE will use test data that it collects in the course of both this test procedure rulemaking and the fluorescent lamp ballast standards rulemaking when setting energy conservation standards for fluorescent lamp ballasts. The BLE test procedure proposal will not affect compliance with existing energy conservation standards, because DOE proposes that manufacturers not be required to use the new test procedure until the date manufacturers are required to comply with amended standards.

G. Scope of Applicability

Today's proposed test procedure is applicable to the fluorescent lamp ballasts covered in the preliminary determination of scope outlined in the preliminary technical support document for the fluorescent lamp ballast standards rulemaking. DOE is considering regulating certain ballasts that operate F32T8, F34T12, F28T5SO, F54T5HO, F96T8/ES, F96T12/ES, F96T8HO, F96T12HO/ES, and F96T12HO lamps. These ballasts can operate between one and six lamps and are used in commercial, residential, and cold-temperature outdoor sign applications. For the proposed test procedure in this rulemaking, DOE would establish particular test setups and calculations depending on type of ballast, as described in more detail in section III.D. For example, DOE would specify certain fluorescent lamps and numbers of these lamps to be paired with certain ballasts for determining ballast performance.

H. Certification and Enforcement

As discussed in the NOPR, DOE regulations do not currently specify the energy efficiency measurement to be certified for fluorescent lamp ballasts. 10 CFR 430.62(a)(4). Earthjustice commented that this omission undermines effective enforcement and negates the value of energy conservation standards. NEEA and NPCC and the CA utilities support DOE specifying the energy efficiency measurement to be certified for fluorescent lamp ballasts. (NEEA & NPCC, No. 32 [17] at p. 10; Earthjustice, No. 14 at p. 1; CA Utilities, No. 13 at p. 3) Earthjustice also commented that DOE could publish a separate final rule to specify the energy efficiency measurement to be certified for fluorescent lamp ballasts on an accelerated timeframe in advance of the full test procedure final rule. Earthjustice further indicated that if manufacturers do not need to retest units to ensure compliance with existing standards using the test procedure in appendix Q, there would be no justification for permitting a period of one year to submit data. (Earthjustice, No. 14 at p. 1) DOE appreciates these comments and has responded to them in the notice of proposed rulemaking for certification, compliance, and enforcement for consumer products and commercial and industrial equipment. 75 FR 56796.

In the context of increasing compliance with energy conservation standards, Philips commented that compliance and enforcement could be improved by requiring the ballasts to be tested at labs that meet certain specifications such as having an audit program and meeting International Organization for Standardization (ISO) criteria. Philips requested that DOE make its criteria consistent with the California Energy Commission (CEC) criteria so that the same data set can be used for certifying products with both organizations. Philips also noted that it has come to NEMA's attention that some offshore ballast suppliers with private labeling may not be complying with energy efficiency regulations. (Philips, Public Meeting Transcript, No. 12 at p. 32–34) NEMA commented that they believe a clear and concise test procedure may encourage voluntary compliance with energy conservation standards. (NEMA, No. 15 at p. 7) Furthermore, NEMA commented that a change from the existing test procedure to the test procedure proposed by NEMA may yield increased compliance by simplifying the methodology. (NEMA, No. 15 at p. 2, 12)

DOE agrees that requiring certification and compliance data to be generated in a certified facility could increase the integrity of the data. DOE also agrees with NEMA that a clear and concise test procedure may also foster voluntary compliance. In this test procedure SNOPR, DOE proposes the measurement of BLE using electrical measurements of a lamp and ballast system. DOE believes this test procedure to be clearer and less burdensome to conduct compared to the existing method which may result in increased compliance.

DOE also proposes that test facilities conducting compliance testing in accordance with amended standards promulgated by the fluorescent lamp ballast standards rulemaking be National Volunteer Laboratory Accreditation Program (NVLAP) accredited, a program administered by the National Institute of Standards and Technology (NIST), or accredited by an organization recognized by NVLAP. NVLAP accreditation is a finding of laboratory competence, certifying that a laboratory operates in accordance with NVLAP management and technical requirements. The NVLAP program is described in 15 CFR part 285, and encompasses the requirements of ISO/IEC 17025.[18] NVLAP (or an organization recognized by NVLAP) accreditation is currently required for laboratories providing certification and compliance data for general service fluorescent, general service incandescent, and incandescent reflector lamps. Either of these accreditation requirements would ensure that all the data DOE uses in its rulemaking comes from standardized and quality controlled sources, increasing confidence in the precision of the data and limiting variations due to differences between testing laboratories. DOE determined that NVLAP imposes fees of $9000 and $8000 on years one and two of accreditation. For the years following, the fees alternate between $5000 and $8000, with the $8000 fee corresponding to the on-site evaluation required every other year. Fees for other accreditation organizations are expected to be similar. DOE invites comment on the benefits and burden imposed by the requirement that certification and compliance data come from an NVLAP or NVLAP recognized organization accredited laboratory.

IV. Procedural Issues and Regulatory Review

A. Executive Order 12866

Today's proposed rule has been determined to not be a "significant regulatory action" under Executive Order 12866, "Regulatory Planning and Review," 58 FR 51735 (Oct. 4, 1993). Accordingly, this action was not subject to review under that Executive Order by the Office of Information and Regulatory Affairs (OIRA) of the Office of Management and Budget (OMB).

B. National Environmental Policy Act

In this proposed rule, DOE proposes test procedure amendments that it expects will be used to develop and implement future energy conservation standards for ballasts. DOE has determined that this rule falls into a

[17] This written comment was submitted in response to the fluorescent lamp ballast energy conservation standard preliminary analysis. 75 FR 14319.

[18] International Organization for Standardization/International Electrotechnical Commission, *General requirements for the competence of testing and calibration laboratories.* ISO/IEC 17025.

class of actions that are categorically excluded from review under the National Environmental Policy Act of 1969 (42 U.S.C. 4321 *et seq.*) and DOE's implementing regulations at 10 CFR part 1021. Specifically, this proposed rule would amend the existing test procedures without affecting the amount, quality or distribution of energy usage, and, therefore, would not result in any environmental impacts. Thus, this rulemaking is covered by Categorical Exclusion A5 under 10 CFR part 1021, subpart D, which applies to any rulemaking that interprets or amends an existing rule without changing the environmental effect of that rule. Accordingly, neither an environmental assessment nor an environmental impact statement is required.

C. Regulatory Flexibility Act

The Regulatory Flexibility Act (5 U.S.C. 601 *et seq.*) requires preparation of an initial regulatory flexibility analysis for any rule that by law must be proposed for public comment, unless the agency certifies that the rule, if promulgated, will not have a significant economic impact on a substantial number of small entities. As required by Executive Order 13272, "Proper Consideration of Small Entities in Agency Rulemaking," 67 FR 53461 (August 16, 2002), DOE published procedures and policies on February 19, 2003, to ensure that the potential impacts of its rules on small entities are properly considered during the DOE rulemaking process. 68 FR 7990. DOE has made its procedures and policies available on the Office of the General Counsel's Web site: *http://www.gc.doe.gov.* In this section, DOE updates the certification provided to the Office of Advocacy of the Small Business Administration (SBA) subsequent to publication of the NOPR.

The SBA has set a size threshold for manufacturers of fluorescent lamp ballasts that defines those entities classified as "small businesses" for the purposes of the Regulatory Flexibility Analysis. DOE used the SBA's small business size standards to determine whether any small manufacturers of fluorescent lamp ballasts would be subject to the requirements of the rule. 65 FR 30836, 30850 (May 15, 2000), as amended at 65 FR 53533, 53545 (September 5, 2000) and codified at 13 CFR part 121. The size standards are listed by North American Industry Classification System (NAICS) code and industry description and are available at *http://www.sba.gov/idc/groups/public/documents/sba_homepage/serv_sstd_tablepdf.pdf.* Fluorescent lamp ballast manufacturing is classified under NAICS 335311, "*Power, Distribution, & Specialty Transformer Manufacturing.*" The SBA sets a threshold of 750 employees or less for an entity to be considered as a small business for this category.

To identify potential small manufacturers as defined by SBA, DOE conducted a market survey using all available public information. DOE's research involved several industry trade association membership directories, product databases, individual company Web sites, and marketing research tools (*e.g.,* Dun and Bradstreet reports) to create a list of every company that manufactures or sells fluorescent lamp ballasts covered by this rulemaking. DOE reviewed all publicly-available data and contacted companies on its list, as necessary, to determine whether they met the SBA's definition of a small business manufacturer of covered fluorescent lamp ballasts. DOE screened out companies that did not offer fluorescent lamp ballasts covered by this rulemaking, did not meet the definition of a "small business," or are foreign owned and operated. Ultimately, DOE identified at least 10 fluorescent lamp ballast manufacturers that produce covered fluorescent lamp ballasts and can potentially be considered small businesses out of the 42 ballast manufacturers listed in the preliminary technical support document of the fluorescent lamp ballast standards rulemaking.

The proposed rule includes revisions to appendix Q and a new appendix Q1. The revisions to appendix Q update an industry reference and do not change the test method or increase testing burden. The only difference between the two test procedures relates to the interference of testing instrumentation. Specifically, the input power measurement of ANSI C82.2–2002 reduces the interference of instrumentation on the input power measurement as compared to ANSI C82.2–1984. The vast majority of companies and testing facilities, however, already employ modern instrumentation that does not significantly interfere with input power measurements. Thus, updating this industry reference would not impose additional financial burden in terms of labor or materials. As described in more detail in sections III.C and III.D, the proposed test procedure in appendix Q1 is generally less burdensome compared to the existing test procedure, while reducing measurement variation. The proposed procedure uses only electrical measurements which are generally simpler and more quickly carried out than photometric measurements. The proposed procedure only uses a reference ballast once every 24 hours, rather than during the performance evaluation of each individual ballast. This change reduces the number of measurements necessary for assigning a BLE and BF to a ballast compared to the number of measurements necessary for BEF and BF under the existing test procedure. In addition, the proposed method specifies a shorter lamp seasoning period (12 hours versus 100 hours) because the lamp's electrical characteristics stabilize sooner than its photometric characteristics.

To analyze the testing burden impacts described above on small business manufacturers, DOE first sought to examine publically available financial data for those companies identified as small businesses to compare the estimated revenue and profit of these businesses to the anticipated testing burden associated with this proposed test procedure. DOE determined that all the identified small business manufacturers were privately owned, and as a result, financial data was not publically available. DOE estimates that the incremental testing costs for an average small business would be no more and likely less than testing costs under the existing BEF test procedure for the reasons set forth in the following paragraph.

The BLE procedure requires no additional equipment compared to the existing test procedure and eliminates the usage of photocells or an integrating sphere. In addition, the existing BEF test procedure requires measurements of lamp light output on a reference ballast and measurements on a test ballast during each test. Light output measurements and electrical measurements of the reference system can require one to two hours depending on the number of reference ballasts available and the speed at which the lamp reaches photometric stability. Light output and electrical measurements of the test ballast are taken immediately after switching the lamps from the reference to the test system. In contrast, the BLE proposal in this SNOPR requires the reference lamps to be measured and stabilized on a reference ballast only once every twenty four hours. After this stabilization, subsequent testing of the ballasts of interest can take between 15 and 60 minutes. DOE estimates that between 4 and 8 ballast samples could be completed in an eight hour period using the existing BEF test procedure, while between 8 and 16 tests could be completed using the BLE test procedure. Therefore, DOE estimates the BLE

procedure could result in an incremental reduction in testing time of about 50%. Assuming the labor rate for carrying out either procedure is $100 per hour, the BLE procedure could reduce testing costs by $50 to $100 dollars per test. DOE notes that depending on setup, some facilities may see less of a reduction in testing time or potentially no change in testing time.

In this SNOPR, DOE is also proposing that test labs be accredited by NVLAP or an organization recognized by NVLAP. Accreditation by NVLAP or an NVLAP-recognized organization may cost approximately $8000 per year, which DOE believes would not be a significant impact.

On the basis of the foregoing, DOE tentatively concludes and certifies that this proposed rule would not have a significant impact on a substantial number of small entities. Accordingly, DOE has not prepared a regulatory flexibility analysis for this rulemaking. DOE has provided its certification and supporting statement of factual basis to the Chief Counsel for Advocacy of the Small Business Administration for review under 5 U.S.C. 605(b).

D. Paperwork Reduction Act

Manufacturers of fluorescent lamp ballasts must certify to DOE that their products comply with any applicable energy conservation standard. In certifying compliance, manufacturers must test their products according to the DOE test procedure for fluorescent lamp ballasts, including any amendments adopted for that test procedure. DOE has proposed regulations for the certification and recordkeeping requirements for all covered consumer products and commercial equipment, including fluorescent lamp ballasts. 75 FR 56796 (Sept. 16, 2010). The collection-of-information requirement for the certification and recordkeeping is subject to review and approval by OMB under the Paperwork Reduction Act (PRA). This requirement has been submitted to OMB for approval. Public reporting burden for the certification is estimated to average 20 hours per response, including the time for reviewing instructions, searching existing data sources, gathering and maintaining the data needed, and completing and reviewing the collection of information.

Public comment is sought regarding: whether this proposed collection of information is necessary for the proper performance of the functions of the agency, including whether the information shall have practical utility; the accuracy of the burden estimate; ways to enhance the quality, utility, and clarity of the information to be collected; and ways to minimize the burden of the collection of information, including through the use of automated collection techniques or other forms of information technology. Send comments on these or any other aspects of the collection of information to Ms. Linda Graves (*see* **ADDRESSES**), and e-mail to *Christine_J._Kymn@omb.eop.gov.*

Notwithstanding any other provision of the law, no person is required to respond to, nor shall any person be subject to a penalty for failure to comply with, a collection of information subject to the requirements of the PRA, unless that collection of information displays a currently valid OMB Control Number.

E. Unfunded Mandates Reform Act of 1995

Title II of the Unfunded Mandates Reform Act of 1995 (UMRA) (Pub. L. 104–4) requires each Federal agency to assess the effects of Federal regulatory actions on State, local, and Tribal governments and the private sector. For proposed regulatory actions likely to result in a rule that may cause expenditures by State, local, and Tribal governments, in the aggregate, or by the private sector of $100 million or more in any one year (adjusted annually for inflation), section 202 of UMRA requires a Federal agency to publish estimates of the resulting costs, benefits, and other effects on the national economy. (2 U.S.C. 1532(a), (b)) UMRA also requires Federal agencies to develop an effective process to permit timely input by elected officers of State, local, and Tribal governments on a proposed "significant intergovernmental mandate." In addition, UMRA requires an agency plan for giving notice and opportunity for timely input to small governments that may be affected before establishing a requirement that might significantly or uniquely affect them. On March 18, 1997, DOE published a statement of policy on its process for intergovernmental consultation under UMRA. 62 FR 12820. (This policy is also available at *http://www.gc.doe.gov*). DOE examined today's proposed rule according to UMRA and its statement of policy and determined that the rule contains neither an intergovernmental mandate, nor a mandate that may result in the expenditure of $100 million or more in any year, so these requirements do not apply.

F. Treasury and General Government Appropriations Act, 1999

Section 654 of the Treasury and General Government Appropriations Act, 1999 (Pub. L. 105–277) requires Federal agencies to issue a Family Policymaking Assessment for any proposed rule that may affect family well-being. Today's proposed rule would not have any impact on the autonomy or integrity of the family as an institution. Accordingly, DOE has concluded that it is unnecessary to prepare a Family Policymaking Assessment.

G. Executive Order 13132

Executive Order 13132, "Federalism," 64 FR 43255 (August 4, 1999) imposes certain requirements on agencies formulating and implementing policies or regulations that preempt State law or that have Federalism implications. The Executive Order requires agencies to examine the constitutional and statutory authority supporting any action that would limit the policymaking discretion of the States and to carefully assess the necessity for such actions. The Executive Order also requires agencies to have an accountable process to ensure meaningful and timely input by State and local officials in the development of regulatory policies that have Federalism implications. On March 14, 2000, DOE published a statement of policy describing the intergovernmental consultation process it will follow in the development of such regulations. 65 FR 13735. DOE has examined this proposed rule and has determined that it would not have a substantial direct effect on the States, on the relationship between the national government and the States, or on the distribution of power and responsibilities among the various levels of government. EPCA governs and prescribes Federal preemption of State regulations as to energy conservation for the products that are the subject of today's proposed rule. States can petition DOE for exemption from such preemption to the extent, and based on criteria, set forth in EPCA. (42 U.S.C. 6297(d)) No further action is required by Executive Order 13132.

H. Executive Order 12988

With respect to the review of existing regulations and the promulgation of new regulations, section 3(a) of Executive Order 12988, "Civil Justice Reform," 61 FR 4729 (Feb. 7, 1996), imposes on Federal agencies the general duty to adhere to the following requirements: (1) Eliminate drafting errors and ambiguity; (2) write regulations to minimize litigation; (3) provide a clear legal standard for affected conduct rather than a general standard; and (4) promote simplification and burden reduction. Section 3(b) of Executive Order 12988 specifically requires that Executive agencies make

every reasonable effort to ensure that the regulation: (1) Clearly specifies the preemptive effect, if any; (2) clearly specifies any effect on existing Federal law or regulation; (3) provides a clear legal standard for affected conduct while promoting simplification and burden reduction; (4) specifies the retroactive effect, if any; (5) adequately defines key terms; and (6) addresses other important issues affecting clarity and general draftsmanship under any guidelines issued by the Attorney General. Section 3(c) of Executive Order 12988 requires Executive agencies to review regulations in light of applicable standards in sections 3(a) and 3(b) to determine whether they are met or it is unreasonable to meet one or more of them. DOE has completed the required review and determined that, to the extent permitted by law, the proposed rule meets the relevant standards of Executive Order 12988.

I. Treasury and General Government Appropriations Act, 2001

Section 515 of the Treasury and General Government Appropriations Act, 2001 (Pub. L. 106–554; 44 U.S.C. 3516 note) provides for agencies to review most disseminations of information to the public under guidelines established by each agency pursuant to general guidelines issued by OMB. OMB's guidelines were published at 67 FR 8452 (Feb. 22, 2002), and DOE's guidelines were published at 67 FR 62446 (Oct. 7, 2002). DOE has reviewed today's proposed rule under the OMB and DOE guidelines and has concluded that it is consistent with applicable policies in those guidelines.

J. Executive Order 13211

Executive Order 13211, "Actions Concerning Regulations That Significantly Affect Energy Supply, Distribution, or Use," 66 FR 28355 (May 22, 2001), requires Federal agencies to prepare and submit to OMB, a Statement of Energy Effects for any proposed significant energy action. A "significant energy action" is defined as any action by an agency that promulgated or is expected to lead to promulgation of a final rule, and that: (1) Is a significant regulatory action under Executive Order 12866, or any successor order; and (2) is likely to have a significant adverse effect on the supply, distribution, or use of energy; or (3) is designated by the Administrator of OIRA as a significant energy action. For any proposed significant energy action, the agency must give a detailed statement of any adverse effects on energy supply, distribution, or use should the proposal be implemented, and of reasonable alternatives to the action and their expected benefits on energy supply, distribution, and use. Today's regulatory action to amend the test procedure for measuring the energy efficiency of fluorescent lamp ballasts is not a significant regulatory action under Executive Order 12866. Moreover, it would not have a significant adverse effect on the supply, distribution, or use of energy, nor has it been designated as a significant energy action by the Administrator of OIRA. Therefore, it is not a significant energy action, and, accordingly, DOE has not prepared a Statement of Energy Effects.

K. Executive Order 12630

Pursuant to Executive Order 12630, "Governmental Actions and Interference with Constitutionally Protected Property Rights," 53 FR 8859 (March 15, 1988), DOE has determined that this rule would not result in any takings that might require compensation under the Fifth Amendment to the United States Constitution.

L. Section 32 of the Federal Energy Administration Act of 1974

Under section 301 of the Department of Energy Organization Act (Pub. L. 95–91; 42 U.S.C. 7101), DOE must comply with section 32 of the Federal Energy Administration Act of 1974, as amended by the Federal Energy Administration Authorization Act of 1977. (15 U.S.C. 788; FEAA) Section 32 essentially provides in relevant part that, where a proposed rule authorizes or requires use of commercial standards, the notice of proposed rulemaking must inform the public of the use and background of such standards. In addition, section 32(c) requires DOE to consult with the Attorney General and the Chairman of the Federal Trade Commission (FTC) concerning the impact of the commercial or industry standards on competition. The proposed rule incorporates testing methods contained in the following commercial standards: ANSI C82.2–2002, Method of Measurement of Fluorescent Lamp Ballasts. While today's proposed test procedure is not exclusively based on ANSI C82.2–2002, one component of the test procedure, namely measurement of ballast factor, adopts a measurement technique from ANSI C82.2–2002 without amendment. The Department has evaluated these standards and is unable to conclude whether they fully comply with the requirements of section 32(b) of the FEAA, (*i.e.,* that they were developed in a manner that fully provides for public participation, comment, and review). DOE will consult with the Attorney General and the Chairman of the FTC concerning the impact of these test procedures on competition, prior to prescribing a final rule.

V. Public Participation

A. Submission of Comments

DOE will accept comments, data, and information regarding the proposed rule no later than the date provided at the beginning of this notice. Comments, data, and information submitted to DOE's e-mail address for this rulemaking should be provided in WordPerfect, Microsoft Word, PDF, or text (ASCII) file format. Interested parties should avoid the use of special characters or any form of encryption, and wherever possible, comments should include the electronic signature of the author. Comments, data, and information submitted to DOE via mail or hand delivery/courier should include one signed paper original. No telefacsimiles (faxes) will be accepted.

According to 10 CFR 1004.11, any person submitting information that he or she believes to be confidential and exempt by law from public disclosure should submit two copies: one copy of the document including all the information believed to be confidential, and one copy of the document with the information believed to be confidential deleted. DOE will make its own determination as to the confidential status of the information and treat it according to its determination.

Factors of interest to DOE when evaluating requests to treat submitted information as confidential include: (1) A description of the items; (2) whether and why such items are customarily treated as confidential within the industry; (3) whether the information is generally known by or available from other sources; (4) whether the information has previously been made available to others without obligation concerning its confidentiality; (5) an explanation of the competitive injury to the submitting person which would result from public disclosure; (6) a date upon which such information might lose its confidential nature due to the passage of time; and (7) why disclosure of the information would be contrary to the public interest.

B. Issues on Which DOE Seeks Comment

DOE welcomes comments on all aspects of this rulemaking. See section I for further detail. In addition, DOE is particularly interested in receiving comments and views of interested parties concerning the following issues:

1. Impact of Ballast Output on Lamp Efficacy

DOE seeks comment on the impact of lamp current crest factor, waveform, and lamp operating frequency on the efficacy of a fluorescent lamp. DOE also seeks comment on its decision to adjust the BLE of low-frequency ballasts by a factor of 0.9. *See* section III.C.2 for further detail.

2. Ballast Factor Calculation

DOE seeks comment on the proposed technique for calculating ballast factor and on the lamp arc powers empirically derived. DOE also seeks comment on how frequently reference lamp power (on a reference ballast) should be measured. *See* section III.D.4 for further detail.

3. Impact of Reference Lamp Measured Power Variation on Ballast Factor

DOE seeks comment on the impact of reference lamp measured power variation on the ballast factor calculation. *See* section III.D.4 for further detail.

4. Laboratory Accreditation

DOE seeks comment on the potential benefits and burden imposed as a result of requiring all certification and compliance data to be generated at a laboratory accredited by NVLAP or an organization recognized by NVLAP. *See* section III.H for further detail.

VI. Approval of the Office of the Secretary

The Secretary of Energy has approved publication of this proposed rule.

List of Subjects in 10 CFR Part 430

Administrative practice and procedure, Confidential business information, Energy conservation, Household appliances, Imports, Incorporation by reference, Intergovernmental relations, Small businesses.

Issued in Washington, DC on November 4, 2010.

Cathy Zoi,

Assistant Secretary, Energy Efficiency and Renewable Energy.

For the reasons stated in the preamble, DOE is proposing to amend part 430 of Chapter II of Title 10, Code of Federal Regulations as set forth below:

PART 430—ENERGY CONSERVATION PROGRAM FOR CONSUMER PRODUCTS

1. The authority citation for part 430 continues to read as follows:

Authority: 42 U.S.C. 6291–6309; 28 U.S.C. 2461 note.

2. Section 430.3 is amended by:

a. Redesignating paragraphs:

1. (c)(11) as (c)(14);

2. (c)(6) through (c)(10) as (c)(7) through (c)(11);

3. (c)(12) as (c)(13);

4. (c)(13) as (c)(17);

b. Adding the phrase “, Appendix Q1” before “and” in paragraph (c)(5) and in newly designated paragraph (c)(8); and adding the phrase “Appendix Q1 and” in newly designated paragraph (c)(14) before “Appendix”;

c. Revising newly designated paragraph (c)(13); and

d. Adding new paragraphs (c)(6), (c)(12), (c)(15), and (c)(16).

These revisions and additions read as follows:

§ 430.3 Materials incorporated by reference.

* * * * *

(c) * * *

(6) ANSI C78.81–2010, Revision of ANSI C78.81–2005 (“ANSI C78.81–2010”), American National Standard for Electric Lamps—Double-Capped Fluorescent Lamps—Dimensional and Electrical Characteristics, approved January 14, 2010; IBR approved for Appendix Q and Appendix Q1 to subpart B.

* * * * *

(12) ANSI C82.1–2004, Revision of ANSI C82.1–1997 (“ANSI C82.1”), American National Standard for Lamp Ballast—Line-Frequency Fluorescent Lamp Ballast, approved November 19, 2004; IBR approved for Appendix Q and Appendix Q1 to Subpart B.

(13) ANSI C82.2–2002, Revision of ANSI C82.2–1994 (R1995), American National Standard for Lamp Ballasts-Method of Measurement of Fluorescent Ballasts, Approved June 6, 2002, IBR approved for Appendix Q and Appendix Q1 to subpart B.

* * * * *

(15) ANSI C82.11–2002, Revision of ANSI C82.11–1993 (“ANSI C82.11”), American National Standard for Lamp Ballasts—High-frequency Fluorescent Lamp Ballasts, approved January 17, 2002; IBR approved for Appendix Q and Appendix Q1 to subpart B.

(16) ANSI C82.13–2002 (“ANSI C82.13”), American National Standard for Lamp Ballasts—Definitions for Fluorescent Lamps and Ballasts, approved July 23, 2002; IBR approved for Appendix Q and Appendix Q1 to subpart B.

* * * * *

3. Section 430.23 is amended by revising paragraph (q) to read as follows:

§ 430.23 Test procedures for the measurement of energy and water consumption.

* * * * *

(q) *Fluorescent Lamp Ballasts.* (1) The Estimated Annual Energy Consumption (EAEC) for fluorescent lamp ballasts, expressed in kilowatt-hours per year, shall be the product of:

(i) The input power in kilowatts as determined in accordance with section 3.1.3.1 of appendix Q to this subpart before the compliance date of the amended standards for fluorescent lamp ballasts or section 6.2.6 of appendix Q1 to this subpart beginning on the compliance date of the amended standards for fluorescent lamp ballasts; and

(ii) The representative average use cycle of 1,000 hours per year, the resulting product then being rounded off to the nearest kilowatt-hour per year.

(2) Ballast Efficacy Factor (BEF) shall be as determined in section 4.2 of appendix Q of this subpart before the compliance date of the amended standards for fluorescent lamp ballasts. Ballast luminous efficiency (BLE) shall be as determined in section 7.2 of appendix Q1 to this subpart beginning on the compliance date of the amended standards for fluorescent lamp ballasts.

(3) The Estimated Annual Operating Cost (EAOC) for fluorescent lamp ballasts, expressed in dollars per year, shall be the product of:

(i) The representative average unit energy cost of electricity in dollars per kilowatt-hour as provided by the Secretary,

(ii) The representative average use cycle of 1,000 hours per year, and

(iii) The input power in kilowatts as determined in accordance with section 3.1.3.1 of appendix Q to this subpart before the compliance date of the amended standards for fluorescent lamp ballasts or section 6.2.6 of appendix Q1 to this subpart beginning on the compliance date of the amended standards for fluorescent lamp ballasts, the resulting product then being rounded off to the nearest dollar per year.

(4) Standby power consumption of certain fluorescent lamp ballasts shall be measured in accordance with section 3.2 of appendix Q to this subpart.

* * * * *

4. Section 430.25 is revised to read as follows:

§ 430.25 Laboratory Accreditation Program.

The testing for fluorescent lamp ballasts shall be performed in accordance with Appendix Q1 to this subpart. The testing for general service

fluorescent lamps, general service incandescent lamps, and incandescent reflector lamps shall be performed in accordance with Appendix R to this subpart. The testing for medium base compact fluorescent lamps shall be performed in accordance with Appendix W of this subpart. This testing shall be conducted by test laboratories accredited by the National Voluntary Laboratory Accreditation Program (NVLAP) or by an accrediting organization recognized by NVLAP. NVLAP is a program of the National Institute of Standards and Technology, U.S. Department of Commerce. NVLAP standards for accreditation of laboratories that test for compliance with standards for fluorescent lamp ballast ballast luminous efficiency (BLE), fluorescent lamp efficacy, and fluorescent lamp CRI are set forth in 15 CFR part 285. A manufacturer's or importer's own laboratory, if accredited, may conduct the applicable testing.

5. Appendix Q to subpart B of part 430 is amended by:

a. Adding an introductory paragraph after the Appendix heading.

b. Revising sections 1.15, 1.16, 1.17, and 2.

c. Redesignating sections 3.1, 3.2, 3.3, 3.3.1, 3.3.2, 3.3.3, 3.4, 3.4.1, and 3.4.2 as sections 3.1.1, 3.1.2, 3.1.3, 3.1.3.1, 3.1.3.2, 3.1.3.3, 3.1.4, 3.1.4.1, and 3.1.4.2, respectively.

d. Revising newly redesignated sections 3.1.1, 3.1.2, 3.1.3.1, 3.1.3.2, 3.1.3.3, 3.1.4.1, and 3.1.4.2.

e. Redesignating sections 3.5, 3.5.1, 3.5.2, 3.5.3, 3.5.3.1, 3.5.3.2, 3.5.3.3, and 3.5.3.4 as sections 3.2, 3.2.2, 3.2.3, 3.2.4, 3.2.4.1, 3.2.4.2, 3.2.4.3, and 3.2.4.4, respectively.

f. Adding sections 3.1 and 3.2.1.

g. Revising section 4.

These revisions and additions read as follows:

Appendix Q to Subpart B of Part 430—Uniform Test Method for Measuring the Energy Consumption of Fluorescent Lamp Ballasts

Appendix Q is effective until the compliance date of the amended standards for fluorescent lamp ballasts. After this date, all fluorescent lamp ballasts shall be tested using the provisions of Appendix Q1.

* * * * *

1.15 *Power Factor* means the power input divided by the product of ballast input voltage and input current of a fluorescent lamp ballast, as measured under test conditions specified in ANSI C82.2–2002 (incorporated by reference; see § 430.3).

1.16 *Power input* means the power consumption in watts of a ballast of a fluorescent lamp or lamps, as determined in accordance with the test procedures specified in ANSI C82.2–2002 (incorporated by reference; see § 430.3).

1.17 *Relative light output* means the light output delivered through the use of a ballast divided by the light output of a reference ballast, expressed as a percent, as determined in accordance with the test procedures specified in ANSI C82.2–2002 (incorporated by reference; see § 430.3).

* * * * *

2. *Test Conditions.*

2.1 *Measurement of Active Mode Energy Consumption, BEF.* The test conditions for testing fluorescent lamp ballasts shall be done in accordance with ANSI C82.2–2002 (incorporated by reference; see § 430.3). Any subsequent amendment to this standard by the standard setting organization will not affect the DOE test procedures unless and until amended by DOE. The test conditions for measuring active mode energy consumption are described in sections 4, 5, and 6 of ANSI C82.2–2002. The test conditions described in this section (2.1) are applicable to section 3.1 of section 3, Test Method and Measurements.

2.2 *Measurement of Standby Mode Power.* The measurement of standby mode power need not be performed to determine compliance with energy conservation standards for fluorescent lamp ballasts at this time. This and the previous statement will be removed as part of a rulemaking to amend the energy conservation standards for fluorescent lamp ballasts to account for standby mode energy consumption, and the following shall apply on the compliance date for such requirements.

The test conditions for testing fluorescent lamp ballasts shall be done in accordance with ANSI C82.2–2002 (incorporated by reference; see § 430.3). Any subsequent amendment to this standard by the standard setting organization will not affect the DOE test procedures unless and until amended by DOE. The test conditions for measuring standby power are described in sections 5, 7, and 8 of ANSI C82.2–2002. Fluorescent lamp ballasts that are capable of connections to control devices shall be tested with all commercially available compatible control devices connected in all possible configurations. For each configuration, a separate measurement of standby power shall be made in accordance with section 3.2 of the test procedure.

3. * * *

3.1 Active Mode Energy Efficiency Measurement

3.1.1 The test method for testing the active mode energy efficiency of fluorescent lamp ballasts shall be done in accordance with ANSI C82.2–2002 (incorporated by reference; *see* § 430.3). Where ANSI C82.2–2002 references ANSI C82.1–1997, the operator shall use ANSI C82.1–2004 (incorporated by reference; *see* § 430.3) for testing low-frequency ballasts and ANSI C82.11–2002 (incorporated by reference; *see* § 430.3) for high-frequency ballasts.

3.1.2 *Instrumentation.* The instrumentation shall be as specified by sections 5, 7, 8, and 15 of ANSI C82.2–2002 (incorporated by reference; *see* § 430.3).

* * * * *

3.1.3.1 *Input Power.* Measure the input power (watts) to the ballast in accordance with ANSI C82.2–2002 (incorporated by reference; *see* § 430.3), section 4.

3.1.3.2 *Input Voltage.* Measure the input voltage (volts) (RMS) to the ballast in accordance with ANSI C82.2–2002 (incorporated by reference; *see* § 430.3), section 3.2.1 and section 4.

3.1.3.3 *Input Current.* Measure the input current (amps) (RMS) to the ballast in accordance with ANSI C82.2–2002 (incorporated by reference; *see* § 430.3), section 3.2.1 and section 4.

* * * * *

3.1.4.1 Measure the light output of the reference lamp with the reference ballast in accordance with ANSI C82.2–2002 (incorporated by reference; *see* § 430.3), section 12.

3.1.4.2 Measure the light output of the reference lamp with the test ballast in accordance with ANSI C82.2–2002 (incorporated by reference; *see* § 430.3), section 12.

* * * * *

3.2.1 The test for measuring standby mode energy consumption of fluorescent lamp ballasts shall be done in accordance with ANSI C82.2–2002 (incorporated by reference; *see* § 430.3).

* * * * *

4. Calculations.

4.1 Calculate relative light output:

$$\text{relative light output} = \frac{\text{Photocell output of lamp on test ballast}}{\text{Photocell output of lamp on reference ballast}} \times 100$$

Where:

Photocell output of lamp on test ballast is determined in accordance with section 3.1.4.2, expressed in watts, and photocell output of lamp on ref. ballast is determined in accordance with section 3.1.4.1, expressed in watts.

4.2 Determine the Ballast Efficacy Factor (BEF) using the following equations:

(a) Single lamp ballast

$$BEF = \frac{\text{relative light output}}{\text{input power}}$$

(b) Multiple lamp ballast

$$BEF = \frac{\text{average relative light output}}{\text{input power}}$$

Where:

Input power is determined in accordance with section 3.1.3.1,

Relative light output as defined in section 4.1, and

Average relative light output is the relative light output, as defined in section 4.1, for all lamps, divided by the total number of lamps.

4.3 Determine Ballast Power Factor (PF):

$$PF = \frac{\text{Input power}}{\text{Input voltage} \times \text{input current}}$$

Where:

Input power is as defined in section 3.1.3.1,

Input voltage is determined in accordance with section 3.1.3.2, expressed in volts, and

Input current is determined in accordance with section 3.1.3.3, expressed in amps.

6. Appendix Q1 is added to subpart B of part 430 to read as follows:

Appendix Q1 to Subpart B of Part 430—Uniform Test Method for Measuring the Energy Consumption of Fluorescent Lamp Ballasts

Appendix Q1 is effective on the compliance date of the amended standards for fluorescent lamp ballasts. Prior to this date, all fluorescent lamp ballasts shall be tested using the provisions of Appendix Q.

1. Where ANSI C82.2–2002 (incorporated by reference; *see* § 430.3) references ANSI C82.1–1997, the operator shall use ANSI C82.1–2004 (incorporated by reference; *see* § 430.3) for testing low-frequency ballasts and shall use ANSI C82.11–2002 (incorporated by reference; *see* § 430.3) for high-frequency ballasts.

2. *Definitions*

2.1. *Cathode heating* refers to power delivered to the lamp by the ballast for the purpose of raising the temperature of the lamp electrode or filament.

2.2. *Commercial ballast* is a fluorescent lamp ballast that is not a residential ballast as defined in section 2.9 and meets technical standards for non-consumer RF lighting devices as specified in subpart C of 47 CFR part 18.

2.3. *High-frequency ballast* is as defined in ANSI C82.13–2002 (incorporated by reference; *see* § 430.3).

2.4. *Instant-start* is the starting method used instant-start systems as defined in ANSI C82.13–2002 (incorporated by reference; *see* § 430.3).

2.5. *Low-frequency ballast* is a fluorescent lamp ballast that operates at a supply frequency of 50 to 60 Hz and operates the lamp at the same frequency as the supply.

2.6. *Programmed-start* is the starting method used in programmed-start systems as defined in ANSI C82.13–2002 (incorporated by reference; *see* § 430.3).

2.7. *Rapid-start* is the starting method used in rapid-start type systems as defined in ANSI C82.13–2002 (incorporated by reference; *see* § 430.3).

2.8. *Reference lamp* is a fluorescent lamp that meets certain operating conditions as defined by ANSI C82.13–2002 (incorporated by reference; *see* § 430.3).

2.9. *Residential ballast* is a fluorescent lamp ballast designed and labeled for use in residential applications. Residential ballasts must meet the technical standards for consumer RF lighting devices as specified in subpart C of 47 CFR part 18.

2.10. *RMS* is the root mean square of a varying quantity.

3. *Instruments*

3.1. All instruments shall be as specified by ANSI C82.2–2002 (incorporated by reference; *see* § 430.3).

3.2. Power Analyzer. In addition to the specifications in ANSI C82.2–2002 (incorporated by reference; *see* § 430.3), the power analyzer shall have a maximum 100 pF capacitance to ground and frequency response between 40 Hz and 1 MHz.

3.3. Current Probe. In addition to the specifications in ANSI C82.2–2002 (incorporated by reference; *see* § 430.3), the current probe shall be galvanically isolated and have frequency response between 40 Hz and 20 MHz.

4. *Test Setup*

4.1. The ballast shall be connected to a main power source and to the fluorescent lamp load according to the manufacturer's wiring instructions and ANSI C82.1–2004 (incorporated by reference; *see* § 430.3) and C78.81–2010 (incorporated by reference; *see* § 430.3).

4.1.1. Wire lengths between the ballast and fluorescent lamp shall be the length provided by the ballast manufacturer. Wires shall be kept loose and not shortened or bundled.

4.1.1.1. If the wire lengths supplied with the ballast are of insufficient length to reach both ends of lamp, additional wire may be added. The minimal additional wire length necessary shall be added, and the additional wire shall be the same wire gauge as the wire supplied with the ballast. If no wiring is provided with the ballast, 18 gauge or thicker wire shall be used. The wires shall be separated from each other and ground to prevent parasitic capacitance for all wires used in the apparatus, including those wires from the ballast to the lamps and from the lamps to the measuring devices.

4.1.2. The fluorescent lamp shall meet the specifications of a reference lamp as defined by ANSI C82.13–2002 (incorporated by reference; *see* § 430.3) and be seasoned at least 12 hours.

4.2. The ballast shall be connected to the number of lamps equal to the maximum number of lamps the ballast is designed to operate.

4.3. The ballast shall be tested with a reference lamp of the nominal wattage listed in Table A.

TABLE A—LAMP-AND-BALLAST PAIRINGS & REFERENCE LAMP ARC POWER

Ballast type	Nominal lamp wattage	Lamp diameter and base	Reference lamp arc power	
			Low frequency	High frequency
Ballasts that operate one, two, three, four, five, or six straight-shaped lamps (commonly referred to as 4-foot medium bipin lamps) with medium bipin bases, a nominal overall length of 48 inches, a rated wattage of 25 W or more, and an input voltage at or between 120 V and 277 V.	32	T8 MBP	30.8	29
	34	T12 MBP	32	29.81
Ballasts that operate one, two, three, four, five, or six U-shaped lamps (commonly referred to as 2-foot U-shaped lamps) with medium bipin bases, a nominal overall length between 22 and 25 inches, a rated wattage of 25 W or more, and an input voltage at or between 120 V and 277 V.	32	T8 MBP	30.8	29
	34	T12 MBP	32	29.81
Ballasts that operate one or two rapid-start lamps (commonly referred to as 8-foot high output lamps) with recessed double contact bases, a nominal overall length of 96 inches and an input voltage at or between 120 V and 277 V.	86	T8 HO RDC	N/A	86
	95	T12 HO RDC	90	84.88
Ballasts that operate one or two instant-start lamps (commonly referred to as 8-foot slimline lamps) with single pin bases, a nominal overall length of 96 inches, a rated wattage of 52 W or more, and an input voltage at or between 120 V and 277 V.	59	T8 slimline SP	60.1	57
	60	T12 slimline SP	60.5	56.91

TABLE A—LAMP-AND-BALLAST PAIRINGS & REFERENCE LAMP ARC POWER—Continued

Ballast type	Nominal lamp wattage	Lamp diameter and base	Reference lamp arc power	
			Low frequency	High frequency
Ballasts that operate one or two straight-shaped lamps (commonly referred to as 4-foot miniature bipin standard output lamps) with miniature bipin bases, a nominal length between 45 and 48 inches, a rated wattage of 26 W or more, and an input voltage at or between 120 V and 277 V.	28	T5 SO Mini-BP	N/A	27.8
Ballasts that operate one, two, three, or four straight-shaped lamps (commonly referred to as 4-foot miniature bipin high output lamps) with miniature bipin bases, a nominal length between 45 and 48 inches, a rated wattage of 49 W or more, and an input voltage at or between 120 V and 277 V.	54	T5 HO Mini-BP	N/A	53.8
Ballasts that operate one, two, three, or four straight-shaped lamps (commonly referred to as 4-foot medium bipin lamps) with medium bipin bases, a nominal overall length of 48 inches, a rated wattage of 25 W or more, an input voltage at or between 120 V and 277 V, a power factor of less than 0.90, and that are designed and labeled for use in residential applications.	32	T8 MBP	30.8	29
	34	T12 MBP	32	29.81
Ballasts that operate one, two, three, four, five, or six rapid-start lamps (commonly referred to as 8-foot high output lamps) with recessed double contact bases, a nominal overall length of 96 inches, an input voltage at or between 120 V and 277 V, and that operate at ambient temperatures of 20 °F or less and are used in outdoor signs.	86	T8 HO RDC	N/A	86
	110	T12 HO RDC	106	100.03
MBP, Mini-BP, RDC, and SP represent medium bipin, miniature bipin, recessed double contact, and single pin, respectively..				

4.4. Power Analyzer

4.4.1. The power analyzer shall have n + 1 channels where n is the number of lamps a ballast operates.

4.4.2. *Lamp Arc Voltage.* Leads from the power analyzer should attach to each fluorescent lamp according to Figure 1 for rapid- and programmed-start ballasts, Figure 2 for instant-start ballasts operating single pin (SP) lamps, and Figure 3 for instant-start ballasts operating medium bipin (MBP), miniature bipin (mini-BP), or recessed double contact (RDC) lamps. The programmed- and rapid-start ballast test setup includes two 1000 ohm resistors placed in parallel with the lamp pins to create a midpoint from which to measure lamp arc voltage.

4.4.3. *Lamp Arc Current.* A current probe shall be positioned on each fluorescent lamp according to Figure 1 for rapid- and programmed-start ballasts, Figure 2 for instant-start ballasts operating SP lamps, and Figure 3 for instant-start ballasts operating MBP, mini-BP, and RDC lamps.

4.4.3.1. For the lamp arc current measurement, the full transducer ratio shall be set in the power analyzer to match the current probe to the power analyzer.

$$\text{Full Transducer Ratio} = \frac{I_{in}}{V_{out}} \times \frac{R_{in}}{R_{in} + R_s}$$

Where:

I_{in} Current through the current transducer

V_{out} Voltage out of the transducer

R_{in} Power analyzer impedance

R_s Current probe output impedance

Figure 1 Programmed- and Rapid-Start Ballast Instrumentation Setup

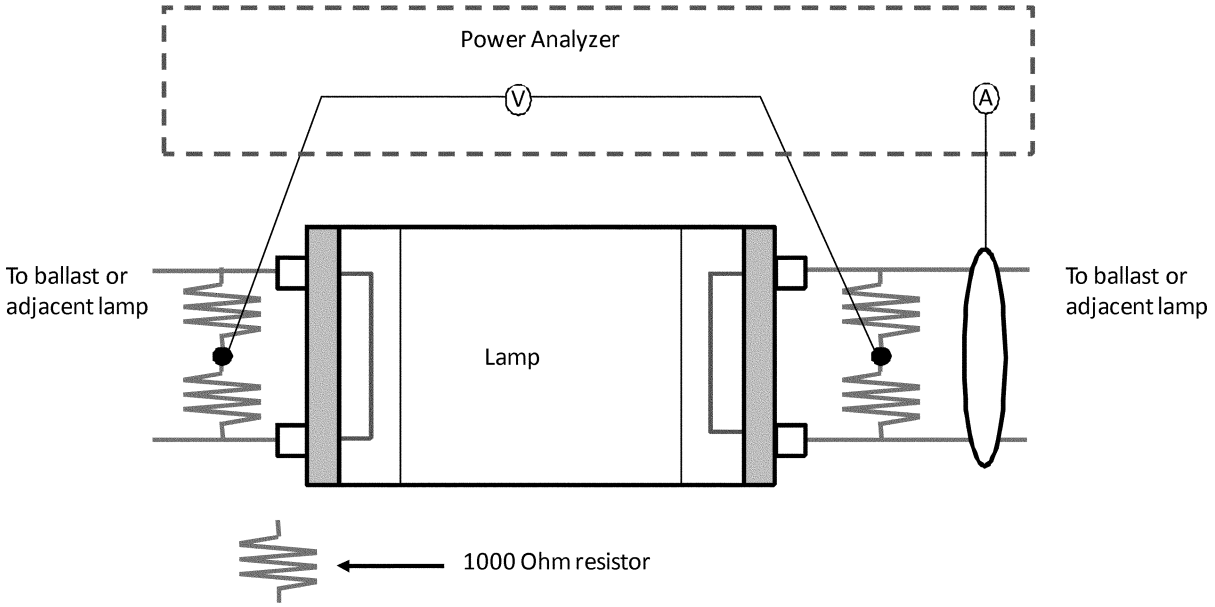

Figure 2 Instant-Start Ballasts that Operate SP Lamps Instrumentation Setup

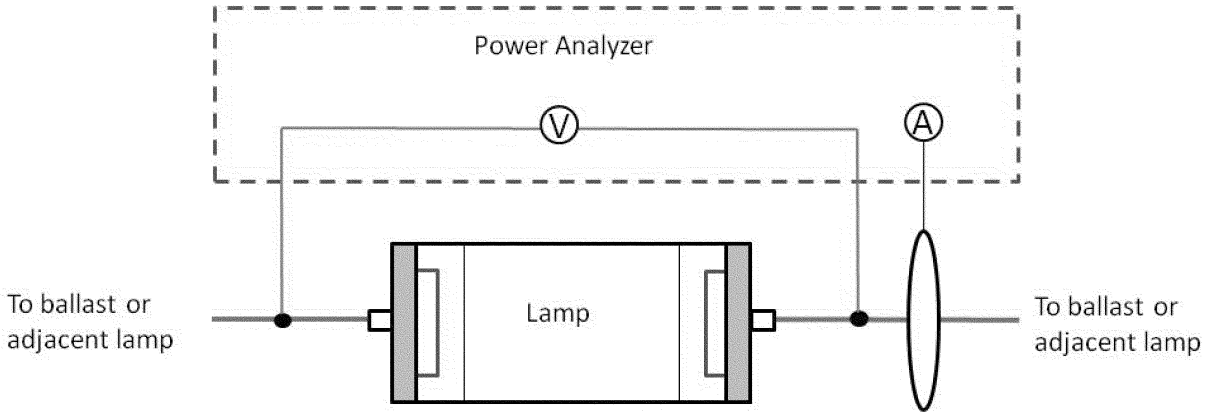

Figure 3 Instant-Start Ballasts that Operate MBP, mini-BP, and RDC Lamps Instrumentation Setup

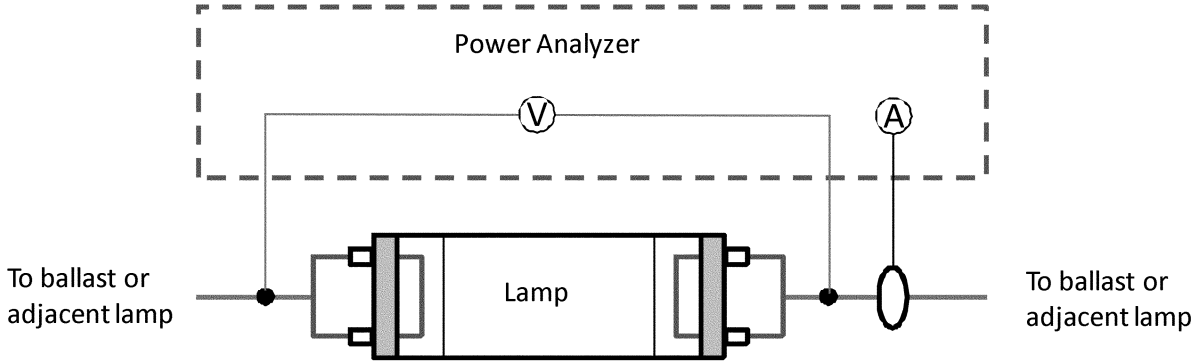

5. *Test Conditions*

5.1. The test conditions for testing fluorescent lamp ballasts shall be done in accordance with ANSI C82.2–2002 (incorporated by reference; *see* § 430.3). DOE further specifies that the following revisions of the normative references indicated in ANSI C82.2–2002) should be used in place of the references directly specified in ANSI C82.2–2002: ANSI C78.81–2010 (incorporated by reference; *see* § 430.3), ANSI C82.1–2004 (incorporated by reference; *see* § 430.3), ANSI C82.3–2002 (incorporated by reference; *see* § 430.3), ANSI C82.11–2002 (incorporated by reference; *see* § 430.3), and ANSI C82.13–2002 (incorporated by reference; *see* § 430.3). All other normative references shall be as specified in ANSI C82.2–2002.

5.2. *Room Temperature and Air Circulation.* The test facility shall be held at 25 ± 2°C, with minimal air movement as defined in ANSI C78.375–1997 (incorporated by reference; *see* § 430.3).

5.3. *Input Voltage.* The directions in ANSI C82.2–2002 (incorporated by reference; *see* § 430.3) section 4.1 should be ignored with the following directions for input voltage used instead. For commercial ballasts capable of operating at multiple voltages, the ballast shall be tested 277V ± 0.1%. For ballasts designed and labeled for residential applications and capable or operating at multiple voltages, the ballast shall be tested at 120V ± 0.1%. For ballasts designed and labeled as cold-temperature outdoor sign ballasts and capable of operating at multiple voltages, the ballast shall be tested at 120V ± 0.1%. Ballasts capable of operating at only one input voltage shall be tested at that specified voltage.

6. *Test Method*

6.1. *Ballast Factor*

6.1.1. Reference ballast lamp arc power shall be measured with a reference ballast at the same frequency as the test ballast in accordance with ANSI C78.375–1997 (incorporated by reference; *see* § 430.3), ANSI C78.81–2010 (incorporated by reference; *see* § 430.3), and ANSI C82.3–2002 (incorporated by reference; *see* § 430.3). Total reference ballast lamp arc power shall be equal to the sum of the reference ballast lamp arc powers of all the reference lamps used with the test ballast. Reference ballast lamp arc power shall be measured once every 24 hours.

6.1.1.1. If the reference ballast characteristics are not specified in ANSI C78.81–2010 (incorporated by reference; *see* § 430.3), then the reference ballast lamp arc power shall be equal to the reference lamp power value listed in Table A times the maximum number of lamps the ballast is designed to operate. The reference lamp power selected from Table A should be at the same frequency as the test ballast.

6.2. *Ballast Luminous Efficiency.*

6.2.1. The ballast shall be connected the appropriate fluorescent lamps and to measurement instrumentation as indicated by the Test Setup in section 4.

6.2.2. The ballast shall be operated for at least 15 minutes but no longer than 1 hour until stable operating conditions are reached. After this condition is reached, concurrently measure the parameters described in sections 6.2.3 through 6.2.9.

6.2.2.1. Stable operating conditions are determined by measuring lamp arc voltage, current, and power once per second in accordance with the setup described in section 4. Once the difference between the maximum and minimum values for lamp arc voltage, current, and power do not exceed one percent over a four minute moving window, the system shall be considered stable.

6.2.3. *Lamp Arc Voltage.* Measure lamp arc voltage (volts) using the setup described in section 4.4.2.

6.2.4. *Lamp Arc Current.* Measure lamp arc current (amps) using the setup described in section 4.4.3.

6.2.5. *Lamp Arc Power.* The power analyzer shall calculate output power by using the measurements described in section 6.2.3 and 6.2.4.

6.2.6. *Input Power.* Measure the input power (watts) to the ballast in accordance with ANSI C82.2–2002 (incorporated by reference; *see* § 430.3), section 7.

6.2.7. *Input Voltage.* Measure the input voltage (volts) (RMS) to the ballast in accordance with ANSI C82.2–2002 (incorporated by reference; *see* § 430.3), section 3.2.1 and section 4.

6.2.8. *Input Current.* Measure the input current (amps) (RMS) to the ballast in accordance with ANSI C82.2–2002 (incorporated by reference; *see* § 430.3), section 3.2.1 and section 4.

6.2.9. *Lamp Operating Frequency.* Measure the frequency of the waveform delivered from the ballast to any lamp in accordance with the setup in section 4.

7. *Calculations*

7.1. Calculate ballast factor (BF):

$$\text{Ballast Factor} = \frac{\text{Total Test Ballast Lamp Arc Power}}{\text{Total Reference Ballast Lamp Arc Power}}$$

Where:

Total test ballast lamp arc power is the sum of the lamp arc powers for all lamps operated by the ballast as determined in accordance with section 6.2.5, expressed in watts, and total reference ballast lamp arc power is determined in accordance with section 6.1.1, expressed in watts.

7.2. Calculate ballast luminous efficiency (BLE).

$$\text{Ballast Luminous Efficiency} = \frac{\text{Total Test Ballast Lamp Arc Power}}{\text{Ballast Input Power}} * \beta$$

Where:

Total Lamp Arc Power is the sum of the lamp arc powers for all lamps operated by the ballast as determined by section 6.2.5, ballast input power is as determined by section 6.2.6, and β is equal to 1.0 for high-frequency ballasts and 0.9 for low-frequency ballasts.

7.3. Calculate Power Factor (PF).

$$\text{Power Factor} = \frac{\text{Ballast Input Power}}{\text{Input Voltage} \times \text{Input Current}}$$

Where:

Ballast input power is determined in accordance with section 6.2.6, input voltage is determined in accordance with section 6.2.7, and input current in determined in accordance with section 6.2.8.

[FR Doc. 2010–28793 Filed 11–23–10; 8:45 am]

BILLING CODE 6450–01–P

DEPARTMENT OF ENERGY

10 CFR Part 431

[Docket No. EERE–2010–BT–TP–0034]

RIN 1904–AC40

Energy Efficiency Program for Certain Commercial and Industrial Equipment: Test Procedures for Commercial Refrigeration Equipment

AGENCY: Office of Energy Efficiency and Renewable Energy, Department of Energy.

ACTION: Notice of proposed rulemaking and public meeting.

SUMMARY: The U.S. Department of Energy (DOE) proposes amendments to its test procedure for commercial refrigeration equipment (CRE). The amendments would update the referenced industry test procedures to the most current version, incorporate methods to evaluate the energy impacts resulting from the use of night curtains and lighting occupancy sensors, and allow testing of certain commercial refrigerators at their lowest application product temperature. These test procedures will apply to commercial refrigerators, freezers, and refrigerator-freezers, as defined in the Energy Policy and Conservation Act of 1975 (EPCA), as amended. Use of any amended test procedures will be required on the compliance date of any standards developed in the associated energy conservation standard rulemaking. DOE will hold a public meeting to receive and discuss comments on the proposal.

DATES: DOE will hold a public meeting in Washington, DC on Thursday, January 6, 2011, from 9 a.m. to 4 p.m. Additionally, DOE plans to conduct the public meeting via webinar. DOE will accept comments, data, and other information regarding this notice of proposed rulemaking (NOPR) before or after the public meeting, but no later than January 24, 2011. *See* section V, "Public Participation," of this NOPR for details.

You can attend the public meeting via webinar, and registration information, participant instructions, and information about the capabilities available to webinar participants will be published on the following Web site: *https://www1.gotomeeting.com/join/638471849*. Participants are responsible for ensuring their systems are compatible with the webinar software.

The purpose of the meeting is to receive comments and to help DOE understand potential issues associated with this proposed rulemaking. DOE must receive requests to speak at the meeting before 4 p.m., Thursday, December 22, 2010. DOE must receive a signed original and an electronic copy of statements to be given at the public meeting before 4 p.m., Thursday, December 29, 2010.

ADDRESSES: The public meeting will be held at the U.S. Department of Energy, Forrestal Building, Room 1E–245, 1000 Independence Avenue, SW., Washington, DC 20585–0121. Please note that foreign nationals planning to participate in the public meeting are subject to advance security screening procedures which require advance notice of 30 days prior to attendance of the public meeting. If a foreign national wishes to participate in the public meeting, please inform DOE of this fact as soon as possible by contacting Ms. Brenda Edwards at (202) 586–2945 so that the necessary procedures can be completed.

Interested parties may submit comments, identified by docket number EERE–2010–BT–TP–0034 or Regulation Identifier Number (RIN) 1904–AC40, by any of the following methods:

- *Federal eRulemaking Portal: http://www.regulations.gov*. Follow the instructions for submitting comments.
- *E-mail: CRE–2010–TP–0034@ee.doe.gov*. Include the docket number EERE–2010–BT–TP–0034 and/or RIN 1904–AC40 in the subject line of the message.
- *Postal Mail:* Ms. Brenda Edwards, U.S. Department of Energy, Building Technologies Program, Mailstop EE–2J, 1000 Independence Avenue, SW., Washington, DC 20585–0121. Please submit one signed paper original.
- *Hand Delivery/Courier:* Ms. Brenda Edwards, U.S. Department of Energy, Building Technologies Program, 6th Floor, 950 L'Enfant Plaza, SW., Washington, DC 20024. Telephone: (202) 586–2945. Please submit one signed paper original.

Written comments regarding the burden-hour estimates or other aspects of the collection-of-information requirements contained in this proposed rule may be submitted to Office of Energy Efficiency and Renewable Energy through the methods listed above and by e-mail to *Christine_J._Kymn@omb.eop.gov*.

Instructions: All submissions must include the docket number or RIN for this rulemaking. For detailed instructions on submitting comments and additional information on the rulemaking process, *see* section V, "Public Participation," of this document.

Docket: For access to the docket to read background documents or comments received, visit the U.S. Department of Energy, 6th Floor, 950 L'Enfant Plaza, SW., Washington, DC 20024, (202) 586–2945, between 9 a.m. and 4 p.m., Monday through Friday, except Federal holidays. Please call Ms. Brenda Edwards at (202) 586–2945 for additional information regarding visiting the Resource Room.

FOR FURTHER INFORMATION CONTACT: Mr. Charles Llenza, U.S. Department of Energy, Office of Energy Efficiency and Renewable Energy, Building Technologies, EE–2J, 1000 Independence Avenue, SW., Washington, DC 20585–0121. Telephone: (202) 586–2192, *Charles_Llenza@ee.doe.gov*. In the Office of General Council contact Mr.