U.S. DEPARTMENT OF ENERGY | Energy Efficiency & Renewable Energy

Guide to Energy-Efficient Windows

Replacing your home's windows with ENERGY STAR® qualified windows will improve indoor comfort and filter out damaging ultraviolet light, while potentially saving you hundreds of dollars a year on heating and cooling costs.

Replacing Old Windows

Traditional window materials used in houses across the United States – single glass pane and later double-pane clear glass – do a poor job of keeping out the cold and excessive heat. If you have these windows in your home, you are likely spending hundreds of dollars a year more in home heating and cooling costs than you would with the latest ENERGY STAR qualified windows.

Replacing old windows represents a significant investment, but the payback in terms of improved thermal comfort, reduced energy usage, and money saved over the long term makes replacement a smart choice. Upgrading to ENERGY STAR qualified models can save you 7%-15% on annual household energy bills, or roughly $71-$501 annually, depending on your geographic location and the type of window being replaced.

Before replacing your windows, be sure you have already properly insulated and air sealed your home. Please see the *DOE Guide to Home Insulation* and *DOE Guide to Air Sealing* under *Further Reading* for more information.

Anatomy of an Efficient Window

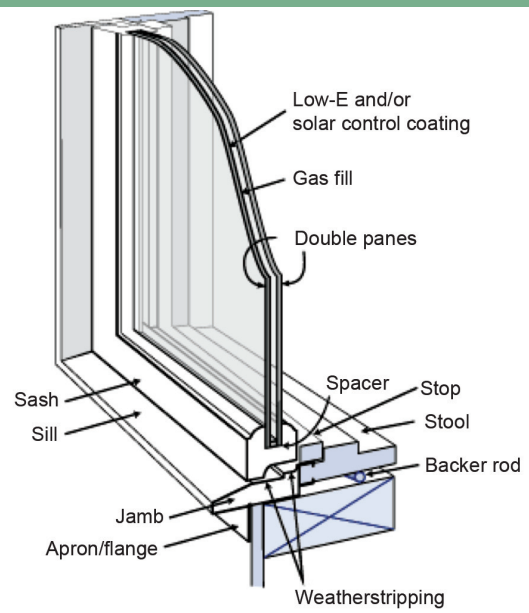

ENERGY STAR Standards

ENERGY STAR qualified windows meet strict performance standards established under the ENERGY STAR program by the U.S. Environmental Protection Agency. ENERGY STAR qualified windows feature:

- Double or even triple panes of glass with inert gases such as argon between them that vastly improve the ability to insulate against unwanted heat flow into or out of the house, depending on the time of year.
- Window frame materials designed to improve the window's insulating abilities.
- Spacers that keep a window's glass panes the correct distance apart to reduce heat flow and help prevent condensation.
- Special coatings to create low emissivity ("low-E") glass. Such low-E glass reflects heat energy either into or out of the house, further enhancing insulation. It also reflects ultraviolet (UV) light away from the house and can protect your household furnishings from UV-induced fading by as much as 75%.

Window Installation Essentials

Even the most energy-efficient windows can result in a drafty house and moisture condensation if they are not properly installed. Make sure to follow manufacturer instructions, seek out trained installers, and watch for lead dust. Most homes built before 1978 contain lead paint, which can pose a serious health hazard during home renovation. Learn about the new U.S. Environmental Protection Agency (EPA) "Renovate Right" campaign – and make sure your window installer is EPA certified.

continued >

Factors to Consider

When purchasing ENERGY STAR qualified windows, look for the U-Factor and the Solar Heat Gain Coefficient (SGHC). The U-Factor measures how well the window insulates. While the U-Factor can take any value, in general for windows it ranges from 0.20 to 1.20. The lower the U-Factor, the better the window insulates. The SHGC measures how much of the sun's heat comes through the window. It can range in value from 0 to 1. The lower the SHGC, the less solar heat the window lets in.

Purchasing ENERGY STAR Windows

Follow these steps when purchasing ENERGY STAR qualified windows:

1. **Look for the ENERGY STAR label when buying new windows.** The label shows the climate zones where that window will perform best.

2. **Determine U-Factor and SHGC ENERGY STAR standards based on your climate zone.** The ENERGY STAR climate map below shows four climate zones for the United States.

3. **Consider window orientation.** Enhance your savings by selecting specific windows for different sides of the house. See table above for more information.

4. **Ask about ENERGY STAR options that are eligible for the federal tax credit and other incentives.** New windows can be a considerable investment with potentially an extended payback period. On average, homeowners recoup about 78% of the cost when the home is sold. You may be able to defray part of the cost upfront. Use the ENERGY STAR Rebate Finder (under *Further Reading*) to see if your local utility also offers incentives.

Shop for Performance

For Windows Facing:	Cold Climate	Warmer Climate
North	Lowest U-factor you can afford	Low U-factor
South	Highest SHGC, Lowest U-factor you can afford	Low SHGC (and lots of shade), Low U-factor
East	Low SHGC (or shaded)	Low SHGC, Low U-factor
West	Low SHGC (or shaded)	Low SHGC, Low U-factor

Further Reading

DOE Guide to Insulation and DOE Guide to Air Sealing
www.energysavers.gov/publications

ENERGY STAR Rebate Locator
www.energystar.gov/index.cfm?fuseaction=rebate.rebate_locator

ENERGY STAR Windows
www.energystar.gov/windows

Energy Windows Collaborative
www.efficientwindows.org/energystar.cfm

EPA Renovation, Repair, and Painting
www.epa.gov/lead/pubs/renovation.htm

National Fenestration Rating Council
www.nfrc.org

Selecting Energy Efficiency by Climate Zone

Climate Zone	U-Factor	SHGC	
Northern	≤ 0.30	Any	Prescriptive
	-0.31	≥ 0.35	Equivalent Energy Performance
	-0.32	≥ 0.40	
North-Central	≤ 0.32	≤ 0.40	
South-Central	≤ 0.35	≤ 0.30	
Southern	≤ 0.60	≤ 0.27	

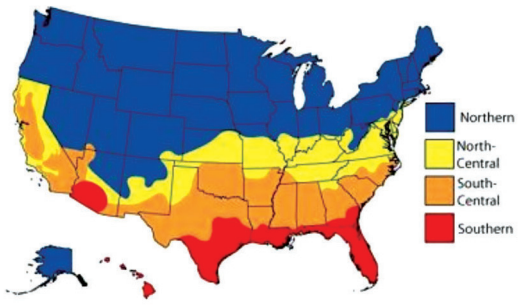

ENERGY STAR Program Requirements for Windows, Doors, and Skylights: Version 5.0 (April 7, 2009)

Financial Incentives

Tax credits, incentives, and rebates may be available in your area. Please visit **www.energysavers.gov/taxcredits** for more information.

U.S. DEPARTMENT OF ENERGY
Energy Efficiency & Renewable Energy

EERE Information Center
1-877-EERE-INFO (1-877-337-3463)
www.energysavers.gov

Printed with a renewable-source ink on paper containing at least 50% wastepaper, including 10% post consumer waste.

DOE/EE-0352 • October 2010