Laboratories for the 21st Century: Best Practice Guide

Chilled Beams in Laboratories: Key Strategies to Ensure Effective Design, Construction, and Operation

Introduction

Laboratories commonly use far more energy than typical office buildings, primarily due to the intensive ventilation required to address environmental, health, and safety concerns. As a result, facility designers and engineers are constantly seeking new ways to reduce energy consumption while maintaining performance. Active chilled beam systems are gaining in popularity among laboratory designers because these systems allow ventilation requirements to be decoupled from sensible heating and cooling loads. This decoupling eliminates the need for reheat coils for temperature control and reduces the fan energy required to maintain comfort.

Chilled beam systems are prevalent in European commercial office buildings but have not yet been widely applied in the U.S. Such systems offer many compelling benefits, including high cooling capacities, excellent performance, and dramatic energy savings for little or no additional costs over conventional systems

The guide presents best practice strategies for designing, constructing, operating, and maintaining chilled beam systems in laboratories and is divided into the following sections:

- **Overview** describes how such beams work and their benefits in a laboratory setting, and presents three case studies.
- **Designing Chilled Beam Systems** discusses sizing a system, the controls and integration required, and the challenges of modeling such systems.
- **Construction** examines system costs, how to hang chilled beams, and code compliance.
- **Commissioning, Operations, and Maintenance** summarizes how to commission, operate, and maintain chilled beam systems.
- **Appendix A** contains a case study of the chilled beam system installed at the Tahoe Center for Environmental Sciences laboratory, which is also a Labs21 partner project.

This guide is one in a series created by the Laboratories for the 21st Century (Labs21) program, a joint program of the U.S. Environmental Protection Agency and U.S. Department of Energy (DOE). Geared towards architects, engineers, and facilities managers, these guides provide information about technologies and practices to use in designing, constructing, and operating safe, sustainable, high-performance laboratories.

EPA United States Environmental Protection Agency

U.S. Department of Energy
Energy Efficiency and Renewable Energy
Federal Energy Management Program

Overview

How Chilled Beams Work

Chilled beams (also called induction diffusers) are fundamentally different from the all-air diffusers used throughout most U.S. buildings. There are two categories of commonly used chilled beams: active and passive. Active chilled beams rely on air handlers supplying outside air to condition a space and a cold water piping system that circulates water through integral cooling coils. The primary airflow from the air handling unit (AHU) to the zone is introduced through small air jets, which typically induce three to five times the amount of room airflow through the beam's coil (see Figure 1). The induction process provides local recirculation of room air. Passive chilled beams rely simply on the natural convection in a room and have no direct air supply. As heat is transferred from the room air to the beam's coil, the air is cooled and falls into the occupied zone. As this occurs, warm room air up by the ceiling is drawn down through the passive beam coils (see Figure 2). Passive beams are best suited to applications with high heat loads and low ventilation air requirements, and therefore have limited application in most laboratories. This guide focuses only on active chilled beams, referred to from this point on simply as chilled beams.

Chilled beams can accommodate sensible and latent loads. However, in properly designed laboratory environments, chilled beams only provide the sensible cooling, while the central air handling system provides the latent cooling. This design avoids the additional costs of running condensate drain piping to each beam in the building. When designing with chilled beams, there are two critical considerations: chilled water temperature and humidity level in the conditioned space. If standard chilled water (45°F) is used in the chilled beam, there is a risk of condensing water on the coil. To prevent such condensation, the chilled beam water temperature must be actively maintained above the room air dew point. Both of these design criteria are discussed in further detail under "System Sizing" (in the "Designing Chilled Beam Systems" section).

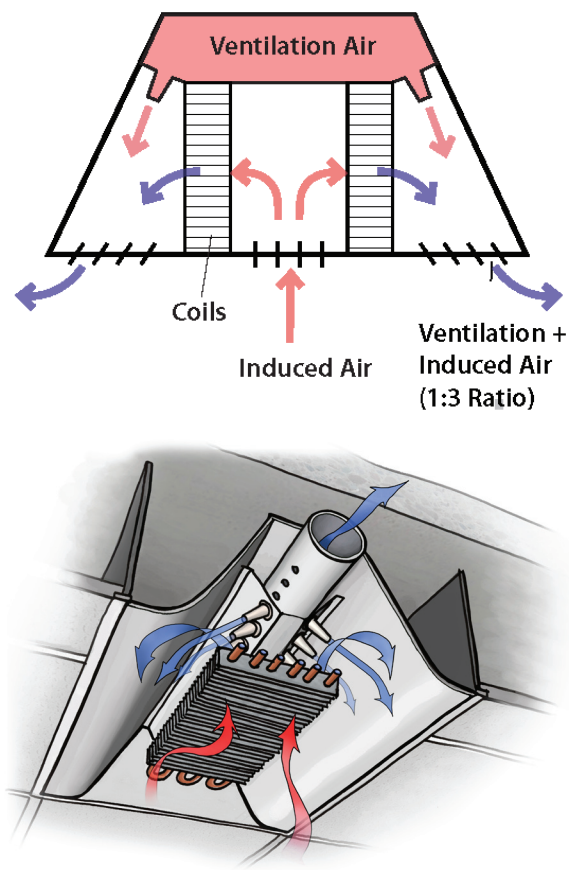

Figure 1. Active chilled beam systems use air supplied from an air handling unit.

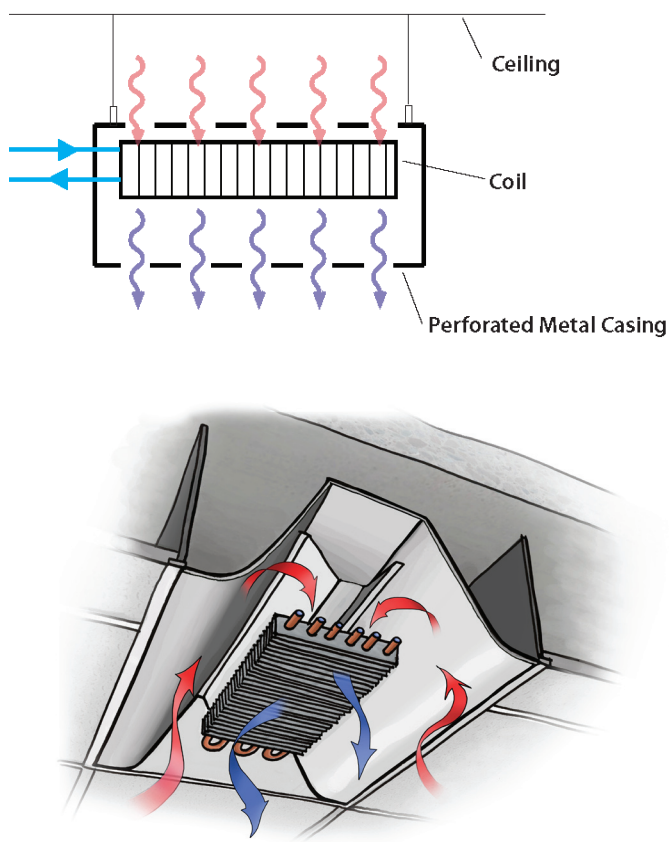

Figure 2. Passive chilled beam systems use the natural convection in a room and have no direct air supply.

Benefits of Chilled Beams in Labs

Chilled beams, while not appropriate for every laboratory, can offer many benefits compared to the variable-air-volume (VAV) reheat scheme commonly used in most standard lab systems (see Figure 3). In the VAV scheme, boxes with reheat coils, control dampers, and airflow measurement devices are placed in each zone. While this system meets building requirements, it uses significant amounts of fan and reheat energy.

The following typical laboratory cases demonstrate how chilled beams can reduce reheat energy, accurately meet outside air requirements, and reduce building-wide systems requirements, compared to VAV systems. The three cases differ in the amount of air required for ventilation, safety, cooling, and fume hoods.

Case 1. Ventilation Driven Airflow

All laboratories require a fixed amount of ventilation air to maintain safety. This case refers to laboratories where this "general exhaust" requirement (typically six air changes per hour) drives the airflow, as distinct from a fume-hood–driven airflow covered in Case 3.

Laboratories are dynamic buildings with a variety of rooms, each with their own general exhaust requirements. In a typical laboratory HVAC (heating, ventilating, and air conditioning) system with VAV reheat, the room with the highest heating load dictates the air temperature supplied by the central AHU. Each lab space then reheats the air, as needed. Reheating such high volumes of air for each room presents a huge potential energy loss. A chilled beam design avoids this energy loss by supplying a higher temperature to each zone and dynamically cooling each space individually. With a fixed amount of ventilation air, chilled beams control the individual laboratory temperature by adjusting the flow of chilled or hot water across the beams to match any changing loads. In this case, using chilled beams eliminates reheat energy and minimizes outside air conditioning.

Case 2. Cooling-Load Driven Airflow

When cooling loads in a lab drive the design airflow rates, the use of chilled beams (which decouple the air and cooling requirements) can dramatically reduce the size of air systems.

In a typical VAV reheat system, each space meets its own cooling load by increasing the volume of cold air supplied. This situation creates a dependent relationship between the airflow and the cooling capacity. In a chilled beam system, cooling is accomplished with pumped chilled water rather than blown cold air. Water has a volumetric heat capacity 3,500 times that of air, which translates to a reduction in fan energy by a factor of seven in typical pump and fan arrangements. On an annual basis, the coil in the chilled beam accomplishes at least half of the cooling with the remaining load handled by the primary air.[1] Furthermore, the ramp-up of air typical in VAV reheat systems no longer occurs in labs with high heat loads. In many detailed energy analyses of labs, cooling air and then reheating it can easily account for 20% of annual HVAC energy costs.[1]

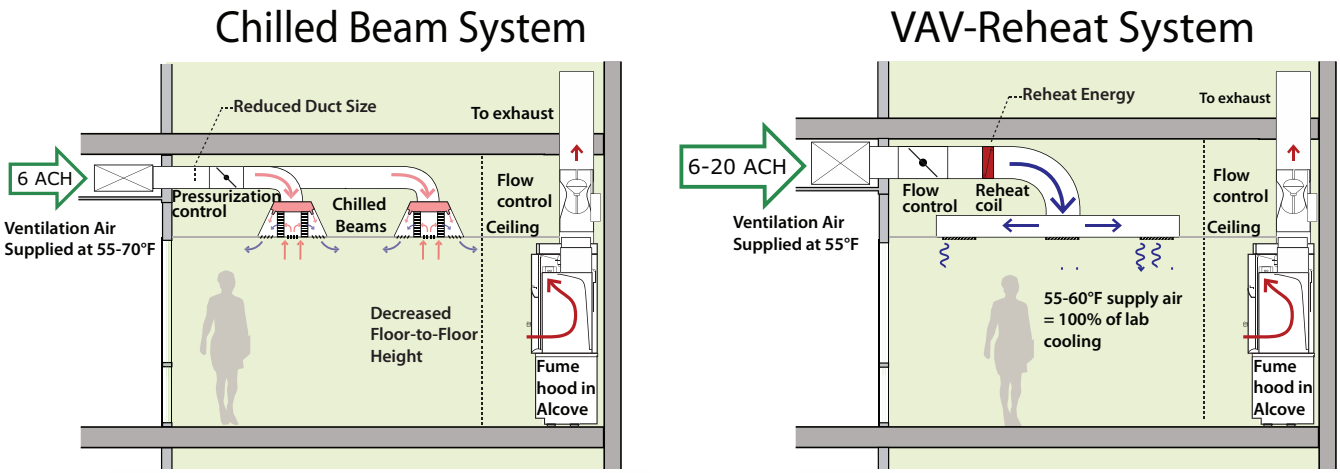

Figure 3. Typical chilled beam and VAV reheat systems in labs. VAV reheat systems use significant amounts of fan and reheat energy compared to chilled beam systems.

When chilled beam systems are used, ducting can be downsized and the air handler central system reduced to handle less than half of the air needed by a typical system.[1] The savings realized can be used to pay for the added piping and chilled beam capital costs. If modest reductions in floor-to-floor height due to smaller ducting are taken into account, using a chilled beam system can translate into an overall savings in construction costs and significantly reduced operation costs as well.

Case 3. Fume Hood Driven Airflow

The benefits of chilled beams are minimal for labs with a high density of fume hoods or other process exhaust. In these labs, higher airflow rates are required for safety, ducts are sized for these higher airflows, and savings from reducing ducting and the central system are not possible. If a building has only a few labs with a high density of fume hoods, chilled beams can still be a solution in those areas of the building with a low density of hoods (a maximum of two hoods per laboratory module). Small VAV boxes with a heating coil can supply additional air in the labs with a high density of hoods, while the remaining labs use chilled beams. In cases like this, careful life-cycle cost analysis will determine the viability of chilled beam systems.

Designing Chilled Beam Systems

This section discusses three areas of system design: system sizing, controls and integration, and energy modeling. A chilled beam system designed for a laboratory with this information in mind can reduce building energy use and costs compared to a standard VAV reheat system.

System Sizing

The process for sizing a chilled beam system can be divided into four major steps:

1. Select the type of beam, based on project performance and setpoints.
2. Select a beam's performance and manufacturer to match the required beam type.
3. Determine the zone in which these beams will be placed and how their proximity to other equipment, such as fume hoods and lighting, will affect the ceiling arrangement and number of beams.
4. Optimize the central system and the required airflow and temperature of the supply air and water.

Step 1. Select a Beam Type

Chilled beams vary in physical size, cooling capacity, airflow capacity, and many other parameters, depending on the manufacturer. For a given laboratory, the beam type selected typically depends on the following design parameters: maximum allowable design pressure drop for both air and water sides, chilled water supply temperature, supply air temperature, and allowable noise levels.

Air and Water Pressure Drop

Pressure drops across both the water side and air side of a chilled beam play a large role in specifying a system. The pressure drops affect the optimal flow through a chilled beam and the cooling capacity potential. Typical waterside pressure drops can range from 10 to 15 feet of water column (ft w.c.) of head through the chilled beam coil.

On the air side, a chilled beam can be selected to have a pressure drop up to 1.5 inches (in). However, we recommend designing for no more than 0.5 in when selecting a beam. Compared with a VAV reheat system, chilled beams can have a small penalty of 0.25 to 0.5 in of static pressure. But, this is insignificant compared to the total fan energy of a VAV system, which typically operates in the range of 3 to 8 in of total static pressure. According to Labs21 guidelines, for a low-pressure drop design, the supply system pressure drop should be between 2 to 3 in, so the chilled beam pressure drop can become more significant.[2]

Chilled beam manufacturers will supply design tables for selecting the best beam based on these two pressure drop criteria. Establishing acceptable ranges for these pressure drops first can give guidance to the amount of air that can be supplied and the possible range of cooling capacities.

Chilled Water Supply Temperature

In a standard lab system, using 45°F chilled water runs the risk of condensing water on the chilled beam coil in the diffuser. To prevent such condensation, chilled water needs to be actively controlled to at least 3 or 4°F above the room air dew point. Because of this, most chilled beams use chilled water in the range of 55 to 62°F. This elevated temperature can also lead to other benefits, such as the option to use water-side economizing or free cooling. In the right moderate climates, electric chillers can even be eliminated and chilled water can be produced directly from a cooling tower with a storage tank. In hot and humid climates, reducing the load and running a dedicated electric chiller that only serves the chilled beams can increase efficiency by 15 to 20%.

Air Supply Temperature

Most chilled beam systems will supply ventilation air of 55 to 70°F at a dew point of 50 to 55°F. At 68 to 70°F, all the cooling is accomplished at the chilled beams and reheat energy can be eliminated. However, elevated air temperatures come at a cost. As the approach temperature between room air and chilled water decreases, the sensible cooling capacity of the room air also decreases. There is a tradeoff between the supply air temperature and the number of chilled beams required to meet the cooling load. As air temperature is increased, more chilled beams are required to meet the same load, which can increase costs and complicate ceiling arrangements.

Noise Requirements

Chilled beams vary in noise level, depending on their nozzle type and airflow rate. In general, chilled beam systems operate at or below standard laboratory system noise levels. For example, with one product, as the primary air static pressure increased by approximately 0.2 in w.c., the noise level increased by 7 to 10 decibel (dB). In a similar way, as airflow rates increased through the beam by roughly 100 cubic feet per minute (cfm), noise levels jumped up by as much as 20 dB. The whole point of noise requirements is that they should be considered when setting limits on pressure drops and airflow rates as a final check to ensure a reasonable range of sound on a case-by-case basis, depending on the project.

Step 2. Select Beam Performance

When selecting a chilled beam, it is important to note that not all beams are created equal. Some beams have a higher capacity for a given supply air volume. In addition, some beams include a choice of nozzle types, further differentiating their performance. Figure 4 displays five different 6-ft beams, each with the same design conditions (see Table 1). Beams come in all lengths, from 2 to 10 ft. Depending on the design requirements, one 6-ft beam can outperform a competitor's 10-ft beam.

Figure 4 shows the higher output of Manufacturer A's beams compared to other comparably sized beams. This company builds more coils per linear foot into their beams to increase capacity and maintain a nominal beam length, leading to an increased weight per beam.

Step 3. Determine Zone Layout

The number of chilled beams in a laboratory will depend on the load density expected, the square footage of the room, the number and location of fume hoods, and whether the ceiling is dropped or open. Most labs run in the range of 5 to 15 watts per square foot (W/sf) and can accommodate up to 25% of the ceiling space for chilled beams at higher load densities. Typically, 50% is a high limit to the amount of ceiling coverage by chilled beams. As coverage increases, installation and coordination of chilled beams and lighting can be cumbersome and

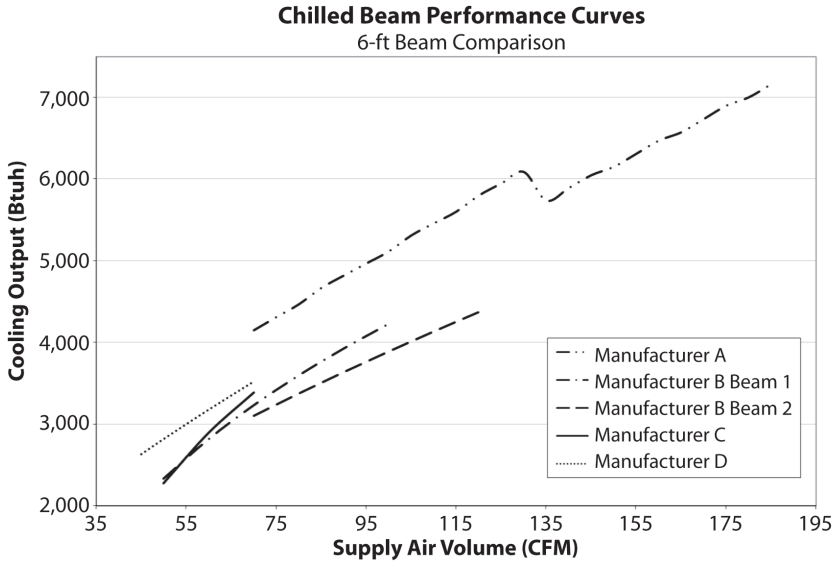

Figure 4. A comparison of 6-ft beams from different manufacturers shows that, even with the same design conditions, cooling performance can differ greatly for a given supply air volume.

Table 1. Various companies were polled with different design software to gage a performance curve for their beams. All initial conditions used are listed here.

Design Data	
CHW Flow Rate	1.25 gpm
CHW Temp	57°F
Supply Air Temp	65°F
Room Temp	75°F
Max. Static Air Pressure Drop	0.5 in w.c..
Max. Water Pressure Drop	10.9 ft w.c.
Max Noise Level	34 NC

installed cost can increase as well. In general, a minimum of 6 ft on center will ensure a good coverage of the ceiling without causing too many coordination problems. Figure 5 shows an example of a chilled beam floor plan. The room supplies air through four chilled beams to maintain ventilation requirements.

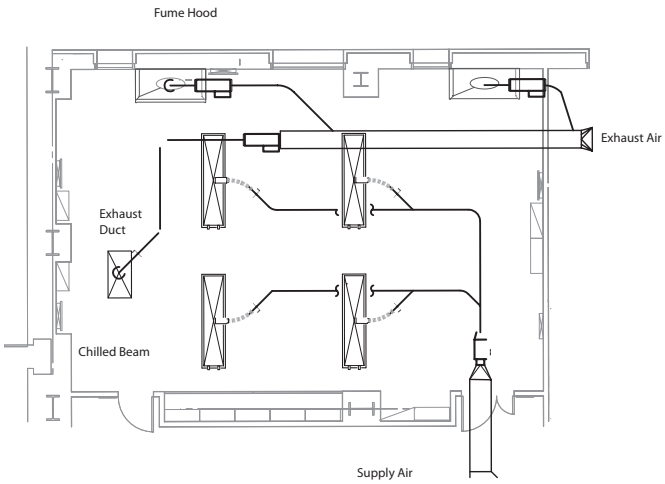

Figure 5. Example of a laboratory floor plan using chilled beams, air diffusers, and fume hoods.

Proximity to Fume Hoods

In laboratories, a uniform fume hood-sash airflow profile must be maintained to ensure safety. At the sash face, crossing airflows must not exceed 50 fpm or the fume hood containment may be compromised, triggering an alarm. In many labs, fume hood placement will constrain chilled beam layouts. Chilled beams are ideally mounted perpendicular to the fume hood sash and 3 to 5 ft away from the hood (see Figure 6), so that the airflow supplied by the beam does not interfere with the smooth airflow to the hoods. If a laboratory requires that a chilled beam be mounted parallel to a fume hood, one-directional beams can be used and some beams allow nozzles to be manually closed upon building startup.

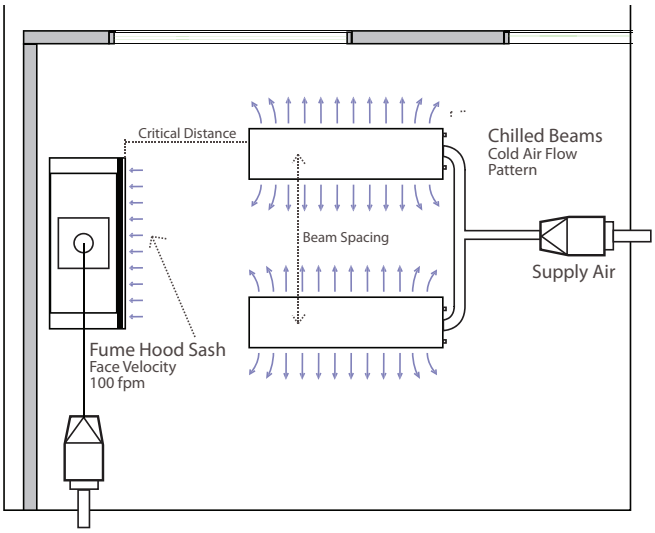

Figure 6. Fume hood proximity to chilled beams and airflow patterns. Fume hoods require a uniform sash-face velocity of 100 fpm to maintain safe containment. Crossing airflow greater than 50 fpm can cause a loss of containment.

Ceiling Type

Dropped ceilings can increase the throw of air off a chilled beam. Due to the Coanda effect, airflow will adhere to any flush surface at the outlet of the chilled beam and fall farther away from the beam (see Figure 7). This phenomenon can affect how a floor plan is arranged and where mixing might occur. With an open ceiling, chilled beams are hung freely and air will drop closer to the beams. Most beam manufacturers offer more details on incorporating this effect into the design.

Lighting needs and seismic supports can also physically limit the amount of chilled beams each zone can support. Chilled beams can be designed to incorporate lights or act as reflective surfaces to bounce light when needed.

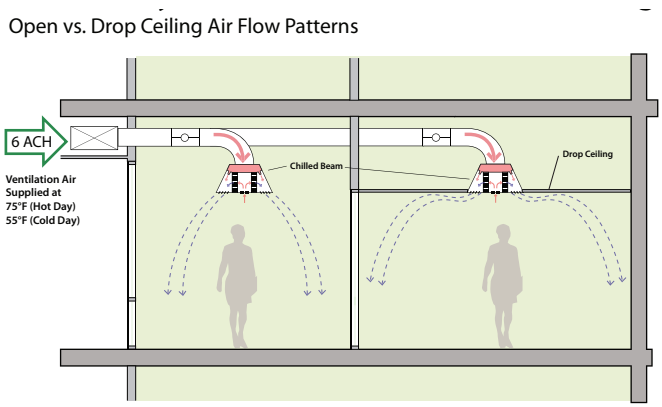

Figure 7. Due to the Coanda effect, air adheres to flush surfaces and will flow further out from a chilled beam with a dropped ceiling.

Hydronic Design Considerations: Two or Four Pipe

From a hydronic standpoint, there are two different types of beams—two pipe and four pipe. Both types can provide heating and cooling. A four-pipe beam has two separate coils: one for heating and one for cooling. A two-pipe beam has a single coil for either heating or cooling. Four-pipe beams weigh more, due to the increased mass of the additional coil, and can also cost more in building and support materials. Depending on how a chilled beam

is plumbed, a two- or four-pipe chilled beam can produce the same effects. For example, consider a case in which hot and cold water pipes (supply and return for both) are plumbed to a chilled beam in a room. That beam can either have two coils—one for heating and one for cooling (four pipe)—or a single coil with switchover control valves (two pipe) that switch between heating and cooling as needed. Figure 8 shows how a two-pipe beam can be plumbed to allow both heating and cooling at a zone level. The costs differ for these two approaches, depending on the application and how much piping is required.

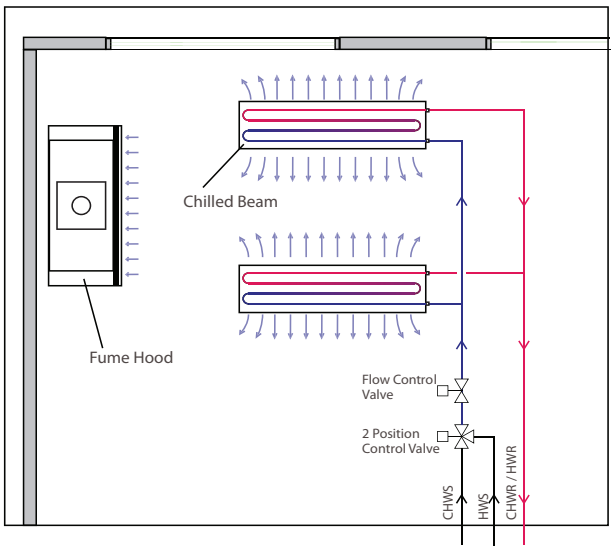

Figure 8. Two-pipe hot-water/chilled-water (HW/CHW) switchover controls for chilled beams allows for both heating and cooling at a zone level.

Step 4. Optimize the Central System

If designed properly, a chilled beam system presents additional opportunities for saving energy and first cost at the central air handling, hot water, and chilled water systems. By using supply air ducts only for ventilation requirements, the size of ducts and central AHU can both be reduced, saving space and costs. By eliminating reheat, the overall hot water system can be reduced in size by reducing or removing zone heating coils and the necessary hot water pipe. And by using a higher chilled water supply temperature, smaller and more efficient chilled water systems can be specified.

This section examines three different components of designing a central system: dehumidification strategies at the central air handler, air handler and duct sizing, and chilled water and hot water systems.

Dehumidification Strategies

Chilled beam systems have a large hurdle to overcome compared with a standard VAV reheat system—strict dehumidification of the supply air. Since chilled beams are most cost effectively used to do only sensible cooling, dehumidification becomes the job of the central air handler. If the relative humidity of the supply air is not controlled, water can condense on the chilled beam cooling coils and drip into the space below. As a precaution, moisture sensors are often placed on the chilled water supply lines, and if moisture is detected, the water valve is closed. However, the problem of how to dehumidify the supply air still exists.

Dehumidification at a central system is typically accomplished in a few different ways. One approach involves cooling outside air with chilled water, condensing moisture out of the air at the coil, and finally reheating the air with a hot water coil from a boiler plant or some other heating source. This will indeed dehumidify the air, but at the expense of increased heating energy use.

Another way is to use a run-around coil (see Figure 9). In this method, a closed-loop pair of heat exchangers runs water around a cooling coil and reheats the supply air for free. This approach achieves the same result as using hot boiler water, but without an energy loss from burning natural gas or using electricity.

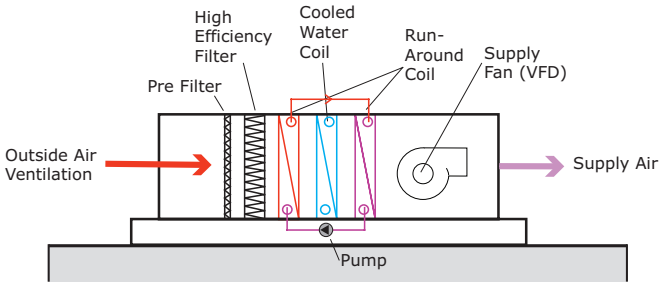

Figure 9. A run-around coil dehumidifies supply air but without burning natural gas or using electricity.

Another, often-discussed method involves using a face-and-bypass dehumidification system. This process is similar to the above scheme, except that the heating coil only spans a portion of the supply air stream. In this way, air bypasses around the coil when dehumidification is not required, saving on the coil pressure drop. System control for this method can be complicated for such a small benefit. For additional heat recovery and humidification strategies, such as enthalpy wheels, see the Labs21 Best Practices guide "Energy Recovery for Ventilation Air in Laboratories."[3]

Air Handler and Duct Sizing

Properly sizing the central air system in a chilled beam design is a crucial step. As discussed, chilled beams allow decoupling of the cooling and ventilation components of a space, requiring less air. These decreased air requirements lead to smaller supply ducts, central fans, and mechanical equipment in general. The savings from using a smaller system ripple through the project. Smaller ducts cost less and require fewer structural supports. The central air handler costs less since supply airflow is decreased. And overall, the system can save on floor-to-floor height with smaller ducting. These savings are critical to offset the price of chilled beams. The price per beam (including manufacturing and shipping) and the price of installation are quite high since most contractors are still unfamiliar with them. But taking into account all their benefits, chilled beam designs remain an economical and energy-efficient choice. More cost information is provided under "Construction."

Chilled Water and Hot Water Systems

In a standard VAV reheat laboratory system, air is cooled (typically to 55°F) to meet the highest load in the building and then reheated in all other zones (see Figure 10). This cooling and heating is typically done with 45°F chilled water and 180°F hot water. Alternatively, chilled beam systems use a higher chilled water temperature and lower hot water temperature. Due to the induced cooling effects of the beams, chilled water temperatures from a central distribution system can range from 55 to 60°F. This higher temperature is possible because, when a building is in cooling mode, each room adjusts its own air temperature without adjusting the airflow, eliminating the need to chill water to a temperature that can service the entire building with 55°F air. In a similar way, heating occurs locally, inducing room air and eliminating the need to heat the cold supply air from the central system. In moderate climates, mechanical chillers can be greatly reduced in size and sometimes even eliminated. In moderate climates with low wet bulb temperatures, cooling towers can run in series with a thermal storage tank, replacing the energy intensive chiller with a waterside economizer. Chilled water can then be produced at night and stored for use the following day (see Figure 11).

Controls and Integration

Chilled beams are primarily constant air volume devices. Output response to zone loads are accomplished by modulating water flow rate, not air volume. Higher water flow rates are required for cooling as opposed to heating because there is a smaller temperature difference between the chilled water and room air temperature. The chilled water will experience a temperature change of only 5 to 6°F (from 57 to 63°F), requiring a larger flow rate to yield an acceptable output. On the other hand, heated water can

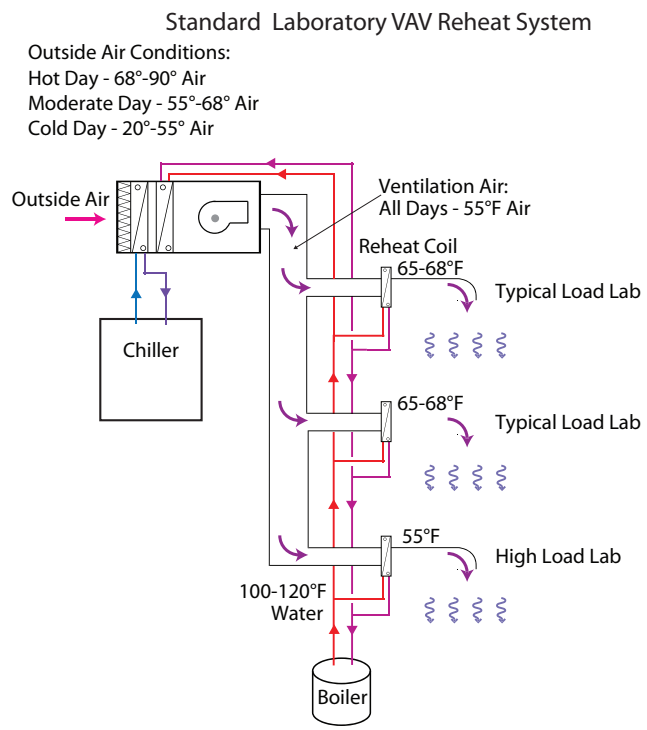

Figure 10. In a standard laboratory VAV reheat system, air is cooled to meet the highest load in the building and then reheated in all other zones.

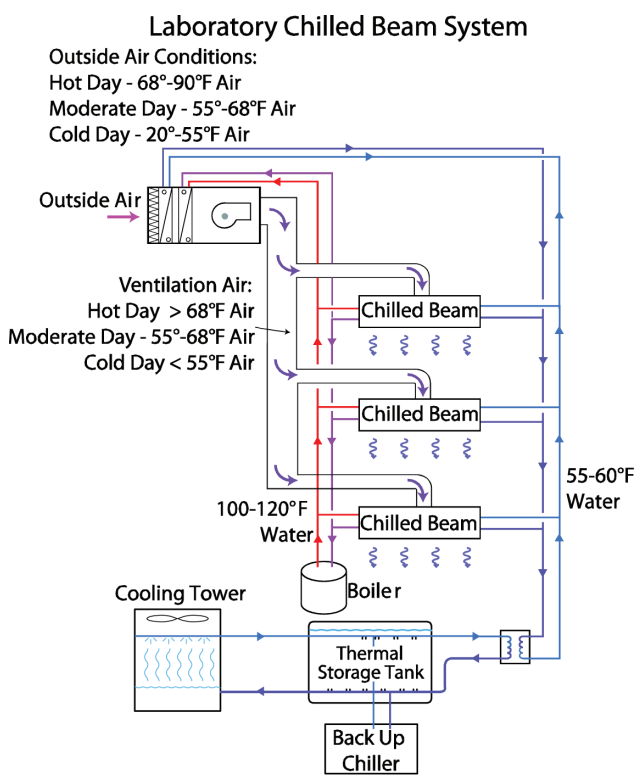

Figure 11. A chilled beam central system can produce and store chilled water for use the following day.

be supplied to a chilled beam at 110°F, above the room setpoint. The heated water can experience a temperature change of 30°F or more. Low energy designs use a hot water supply temperature of 100 to 120°F as a maximum. This temperature limit allows for the maximum efficiencies up to 97% when using condensing boilers. Some systems will have chilled beams and makeup air diffusers; care must be taken to size any reheat coils to use this lower hot water temperature.

Often laboratory buildings need several controls arrangements depending on the requirements of each zone. Figure 12, showing one of the control diagrams used in the authors' laboratory designs, illustrates a possible mix of components.

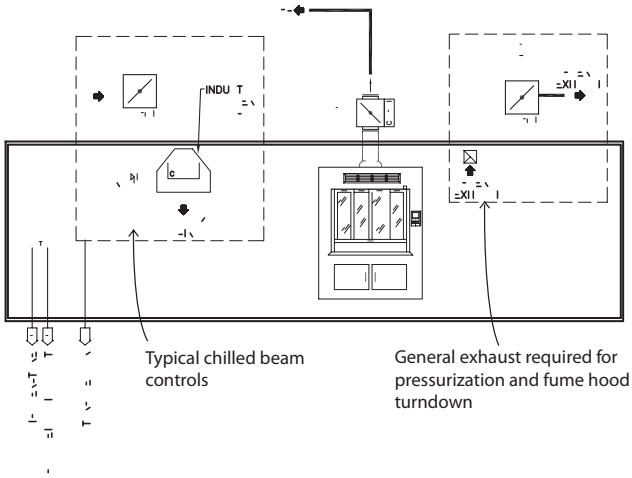

Figure 12. A zone controls diagram for a typical lab showing a possible mix of components. Often laboratory buildings need several controls arrangements, depending on the requirements of each zone.

Energy Modeling Challenges

Modeling chilled beam systems with currently available software applications can be a challenge, as most do not have this specific capability. Most modeling programs are insufficient when it comes to sizing or predicting energy savings of chilled beam systems and require improvement before they can be relied upon. An exception is the most recent (April 2009) version of the U.S. DOE's EnergyPlus simulation tool, which can model chilled beams. The popular program eQuest, a graphical-user-interface that runs on DOE-2.2, does not have an exact chilled beam component; induction units (IU) are the most similar in concept to chilled beams, but they come with limited variability. Care must be taken to segregate the latent load to the AHU as chilled beams can only deliver sensible cooling.

Construction

This section explores the costs of installing chilled beams systems, the methods for hanging the beams, and code compliance.

Costs

Most mechanical contractors are not yet familiar with chilled beam technology; the construction industries that do install them often charge a premium to work on a project with chilled beams. This premium should drop as the technology in laboratories shifts and more people become involved in designing and constructing these systems.

In an article appearing in *Building Design and Construction*, author Dave Barista takes a standard 14,100-sq-ft lab and does a first cost comparison of a chilled beam system installation and a standard VAV laboratory.[4] Results show that chilled beams cost 84% of a standard VAV system and chilled beams with built-in lights cost 96%. Each case considers the cost of the beams as well as the benefits of downsized HVAC components. In both cases, the cost of the overall system is less than the standard, less efficient design.

Hanging Chilled Beams

Most manufacturers recommend mounting chilled beams in a T-bar ceiling and supporting the weight with four threaded rods, one at each corner of a beam for support (see Figures 13 and 14). Some also recommend that guide wires, typically used for seismic requirements, be used for support. To line up chilled beams in the ceiling grid, the beams also need to be adjustable with three degrees of freedom. In addition, chilled beams need to move up and down so they can be leveled upon installation and flush with the ceiling. Because chilled beams and their supply ductwork are often much shallower than conventional VAV boxes, they can save on the physical floor-to-floor height of a building.

A recent installation of chilled beams involved ten points of support per beam, including six threaded rods with Unistrut welded axially to the rods and four diagonal wire attachments for seismic stability. Each beam required eight hours of labor.

Figure 13. Chilled beams in a T-bar ceiling.

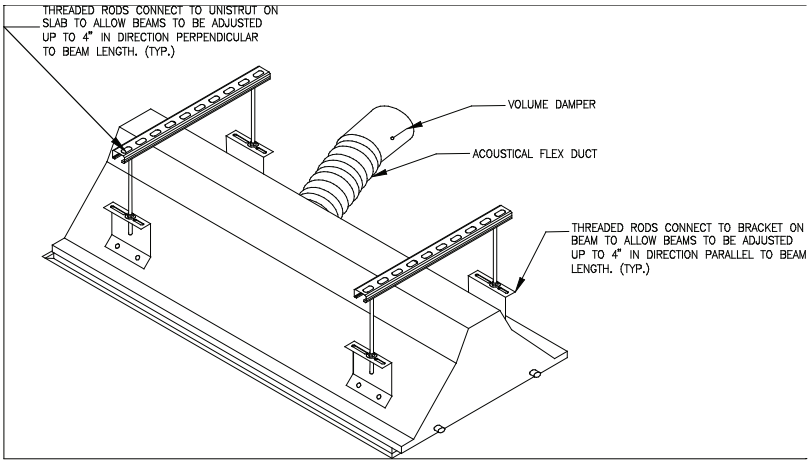

Figure 14. Hanging detail for a chilled beam showing threaded rods.

Manufacturer literature details a less labor-intensive procedure, one that still involves supporting the weight of the beam separately from the ceiling. One product installation manual details the use of threaded rods and Unistrut channels to support the beam from the slab. Another manual says the weight of the unit must be supported separately from the ceiling to avoid stability problems. Suspension holes are provided for this. The same requirement applies to preventing the units themselves from sagging.

Mechanical and lighting consultants should coordinate closely to develop the best lighting and ventilation solution for a room. And, to reiterate, placement of chilled beams close to fume hoods requires careful consideration. Supply air velocity has to be no more than 30 to 50 fpm at the fume hood sash.

Code Compliance

CBC Title 24 (based on IBC 2006) Volume 2 1614A.1.12 ASCE 7, Section 13.5.6.2 states that all fixtures shall be supported directly from the structure with at least two 12-gauge wires located at opposite corners. However, any fixtures weighing 56 lbs or more shall be supported directly from the structure above by approved hangers, and the 12-gauge wires are not required.

When chilled beams are suspended more than 12 in below the ceiling structure, code requires that four diagonal wires, or two opposite diagonal seismic braces, be used in mounting as an added precaution (see Figure 15).

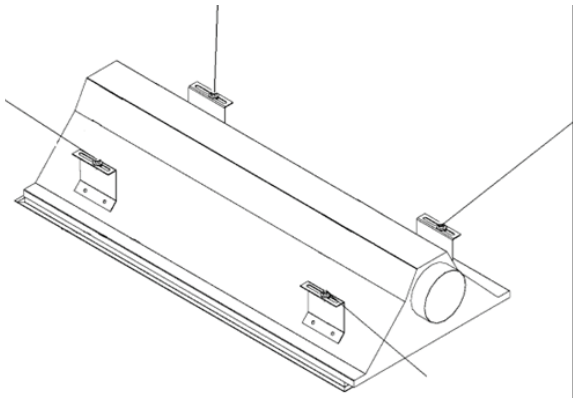

Figure 15. A seismic wire diagram for mounting chilled beams showing four diagonal wires as required by code.

Commissioning, Operations, and Maintenance

Commissioning chilled beams is not much different than commissioning standard supply diffusers or standard duct heating and cooling coils. A chilled beam water loop must be completely purged of any air pockets during startup and throughout the life of the system. The lower flow rates through each beam's chilled water coil can make it tough to purge the air at startup, and care must be taken to ensure that air is purged at each zone. From experience, we have found that manual air vents are more reliable for purging air than automatic air vents. Special attention must be used when placing manual vents at all high points in the chilled water piping network.

Chilled beam coils require periodic cleaning; the frequency depends on the filter level used at the AHU and the amount of dust generated in the lab. Most beams offer easy coil access from below the ceiling. When designing a system, it is important to space beams far enough apart for easy access by maintenance personnel. Maintenance should include vacuuming the face of the beam coils at least every three years. Maintenance personnel will need to be able to access beams from a ladder, often placed in the aisle between two benches in an occupied and active lab. This requirement and the unique nature of laboratory spaces can often drive the placement of beams.

Chilled Beams in Laboratories: Conclusion

Energy-efficient designs must focus on the *entire system* of a building: The impact from one component can greatly affect the scale of another. For instance, chilled beams, while individually costing more than a regular diffuser, impact the central air system of a building and can generate savings that offset their high costs. This contradicts the "received wisdom" that more energy-efficient buildings cost more to build.

As with any new technology, chilled beam systems require care and additional design time to ensure that all possible problems are avoided. Open discussion among engineers, contractors, and lab facility owners will help to speed the successful adoption of this and several other energy-efficient strategies available to designers to lower costs and improve the performance of laboratory facilities.

References

1. Rumsey, P., Weale, J. "Chilled Beams in Labs: Eliminating Reheat & Saving Energy on a Budget." *ASHRAE Journal,* January 2007, pp 18–23, 25.

2. Labs21. "A Design Guide for Energy-Efficient Research Laboratories." *Labs For the 21st Century.* Labs 21, October 10, 2007. Available online at http://www.labs21century.gov/toolkit/design_guide.htm.

3. Labs21. "Energy Recovery for Ventilation Air in Laboratories." *Labs For the 21st Century.* Available online at http://www.labs21century.gov/pdf/bp_recovery_508.pdf.

4. Barista, D. "Chill the Ceilings for Cool Energy Savings." *Building Design and Construction*, November, 2005. Available online at http://www.labdesignnews.com/LaboratoryDesign/LD0512FEAT_3.asp.

The active chilled beam details in Figure 14 and 15 are based on Dadanco product schematics.

For More Information

Barnett, B. "Chilled Beams for Labs: Using Dual Energy Recovery." *ASHRAE Journal,* December 2008.

Shultz, C. "Next-Generation Cooling is Looking Up." *Engineered Systems,* May 2007. Available online at http://www.esmagazine.com/Articles/Feature_Article/BNP_GUID_9-5-2006_A_10000000000000099257.

Virta, M., Takki, T., Oy, I. *WS 07— Air Distribution Systems.* Rehva Workshops at Clima, Rehva Europe, October, 2005. Available online at http://www.rehva.com/workshops/ws_07_1maija_virta.swf.

Appendix A: Tahoe Center for Environmental Sciences, A Case Study

The Tahoe Center for Environmental Sciences (TCES), which opened in August 2006, is one of the first laboratories to incorporate chilled beams in the U.S. Located in Incline Village, Nevada, the 40,000-sq-ft research and teaching laboratory is a joint venture between the University of California, Davis and Sierra Nevada College for studying the Lake Tahoe environment. The building has 10,000 sq ft dedicated to research and educational laboratory space (see Figure A-1).

Figure A-1. The Tahoe Center for Environmental Sciences is one of the first U.S laboratories to use chilled beams.

The laboratory HVAC system uses chilled beams in all of the labs except for two cooling intensive labs, which use fan coils for peak cooling. Ventilation air is supplied at 68°F when outside air temperatures are higher. A free cooling chilled water system generates chilled water at 55 to 65°F to the beams, which then cool the labs as needed. On cold days when outside air temperatures are below 55°F, outside air is heated to 55°F and ventilation air is heated at each lab. When outside air temperatures are between 55 and 70°F, outside air is not treated and chilled beams provide heating and cooling as needed.

This strategy results in no reheat energy use. The minimum ACH during occupied hours for ventilation and safety are six air changes per hour. During unoccupied hours, the second floor Sierra Nevada College labs are reset to a minimum of four ACH. The strategy of decoupling the ventilation system from sensible heating and cooling requirements allowed for a 33% reduction in the ducting and air handler sizing.

The most compelling aspect of this project was its cost efficiency. Ducting, airshaft, and air handler sizes were significantly reduced, saving almost $20,000 (see Table A-1). However, due to the high cost of the induction diffusers (they had never been used in Nevada, and contractors and regulatory agencies were unfamiliar with the product) the construction cost of this system was comparable to a standard mechanical system. The design team did have difficulties with the design budget due to additional time spent analyzing the system as compared to standard systems. Further time was spent explaining and justifying the design to the owners and contractors.

Table A-1. Approximate cost comparison of standard system design and chilled beam design for the Tahoe Center for Environmental Sciences.

	Standard System Design	Chilled Beam
Design		
OA Air Handler Sizing	27,000 cfm	18,000 cfm
Ductwork	37,500 lb	30,000 lb
Exhaust Fan Capacity	27,000 cfm	18,000 cfm
Cooling System Capacity	35 tons	20 tons
Floor to Ceiling Height[1]	9 ft	10 ft
Mechanical System[2] Cost	$741,000	$722,000

1. Floor-to-floor height kept constant; chilled beam allowed for ceiling to be raised 1 ft.

2. Laboratory portion of the building is 10,000 ft^2 or 25% of the building. HVAC costs include laboratory systems only.

Chilled beams made it possible to eliminate reheat and reduce the HVAC energy for the building by 57%. Several other strategies were integrated into the building, including waste heat recovery from the exhaust air, a cogeneration system where waste heat is reclaimed for heating outside air, a 100% free cooling chilled water system that generates chilled water stored in tanks in cool evening hours, and a 30-kilowatt photovoltaic system that covers 10% of the electrical demand of the building.

Field Testing

Two labs at the Tahoe Center were tested over a three-day period in August 2008 to see how the chilled beams were performing. Fog tests using water vapor demonstrated the flow path of air induced through the chilled beam (Figure A-2).

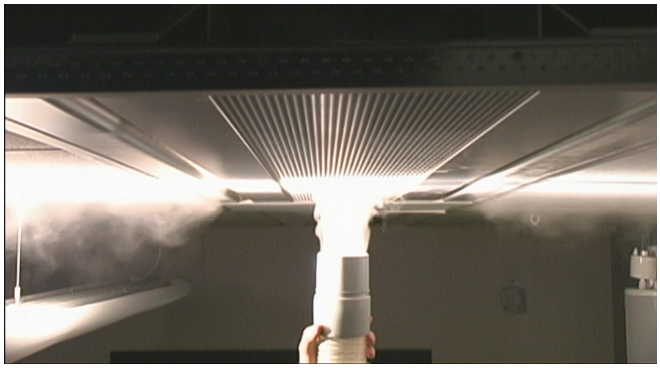

Figure A-2. Fog machine used at the Tahoe Center showing the airflow pattern of a chilled beam.

The measured data painted a promising picture, with the chilled beams showing excellent performance. They supplied 80 to 90% of the cooling to the labs while responding to fluctuations in loads and outside air temperature. Figure A-3 shows the room air temperature remained relatively constant, with temperatures fluctuating only ±1.5°F, even as outside air temperature fluctuated by nearly 20°F.

Lessons Learned

Several great lessons came from the Tahoe Center building regarding how best to design laboratories with chilled beams. One of the largest hurdles was simply introducing a new piece of technology to both the owner and contractor. Concerns about their actual performance ability, as well as maintenance and installation, had to be very thoroughly explained and the whole design team had to study the science of how the system would operate to assure any questions were answered during the design phase.

Coordinating with the different contractors and placing large beams in the ceiling with lights was another great lesson learned. On several beams, lights and support structures had to be modified to fit all the components.

Another important lesson involved maintenance of the whole building system and component interactions. For instance, at one point, air filters in the central system clogged and greatly reduced the cooling capacity the chilled beams. In another case, a few chilled beams in one lab had to be re-purged of trapped air, a process easily accomplished with manual air vents placed on the highest

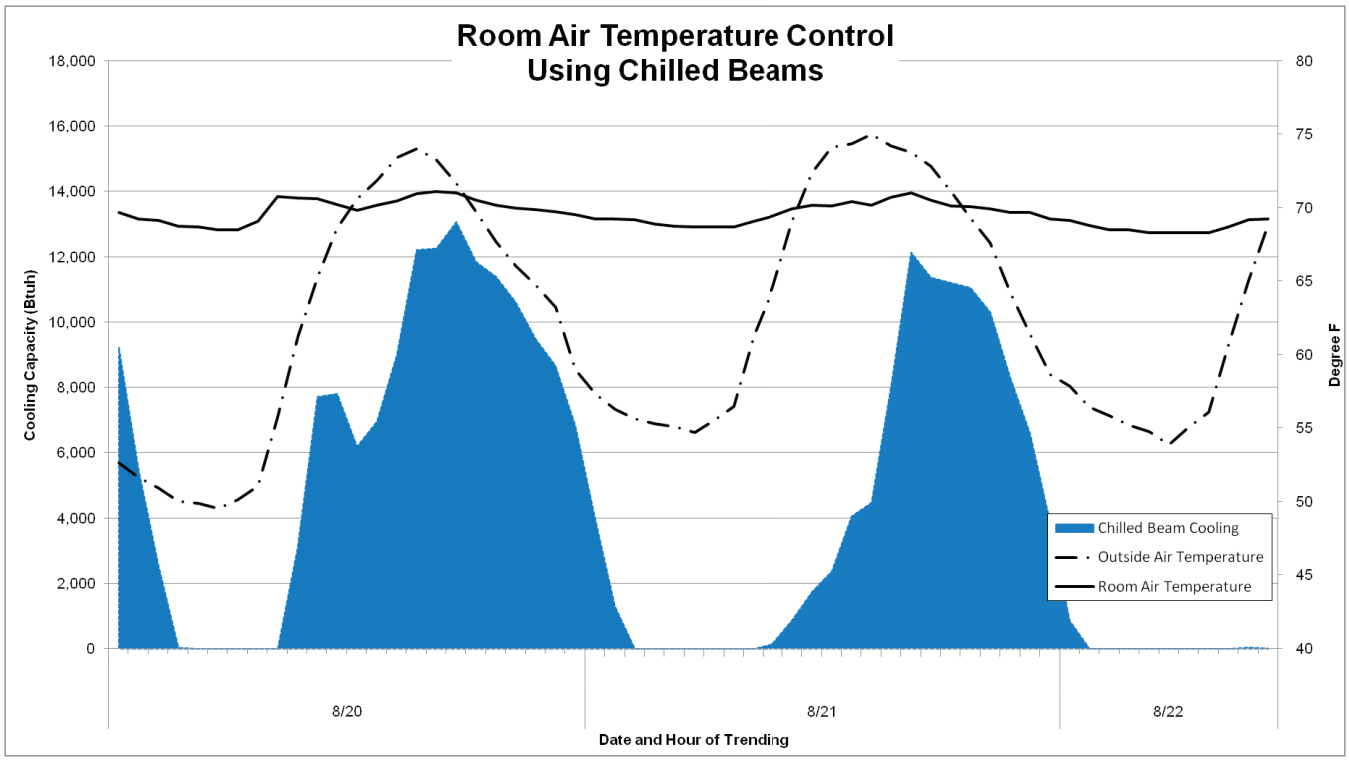

Figure A-3. In a test of two lab rooms using chilled beams at the Tahoe Center, room air temperature remained a relative constant 70°F as outside air temperatures rose and fell.

points of the piping. Most issues were minimal in their overall impact and easily avoided with thorough commissioning and maintenance.

Conclusions

The energy savings and subsequent annual cost savings were very impressive (see Figure A-4). Over the last few years, the energy bills collected show the building's usage are just below the design conditions and exceed the labs in cool, dry climates from the Labs21 benchmarking database (see Figure A-5).

The Tahoe lab is in a climate that does not require as much cooling as many other climates in the U.S. In more chal¬lenging climates (more hours of heating and cooling) the reduction in outside air will result in greater heating and cooling savings. In climates where more cooling is required, savings from reheat reduction will also be greater. Where significant dehumidification is required, savings from reducing reheat can be maintained with a run-around coil that provides free precooling and free reheat in the ventilation air handler.

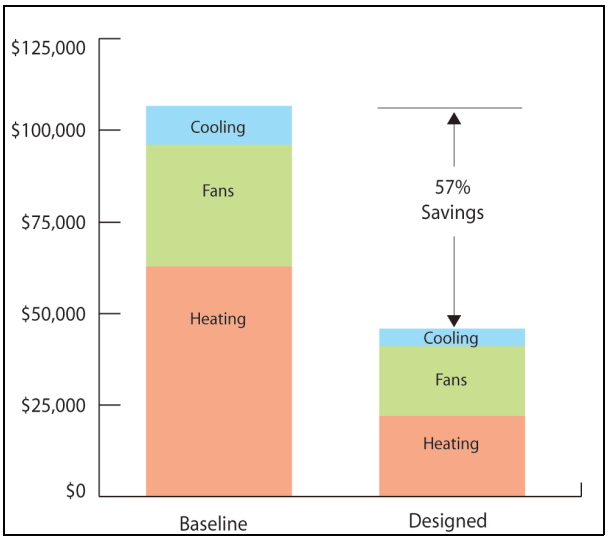

Figure A-4. Baseline and designed estimated annual energy costs for cooling, heating and fans (based on DOE2 models, assuming $0.11/kWh and $1.03/therm) for the Tahoe Center for Environmental Sciences.

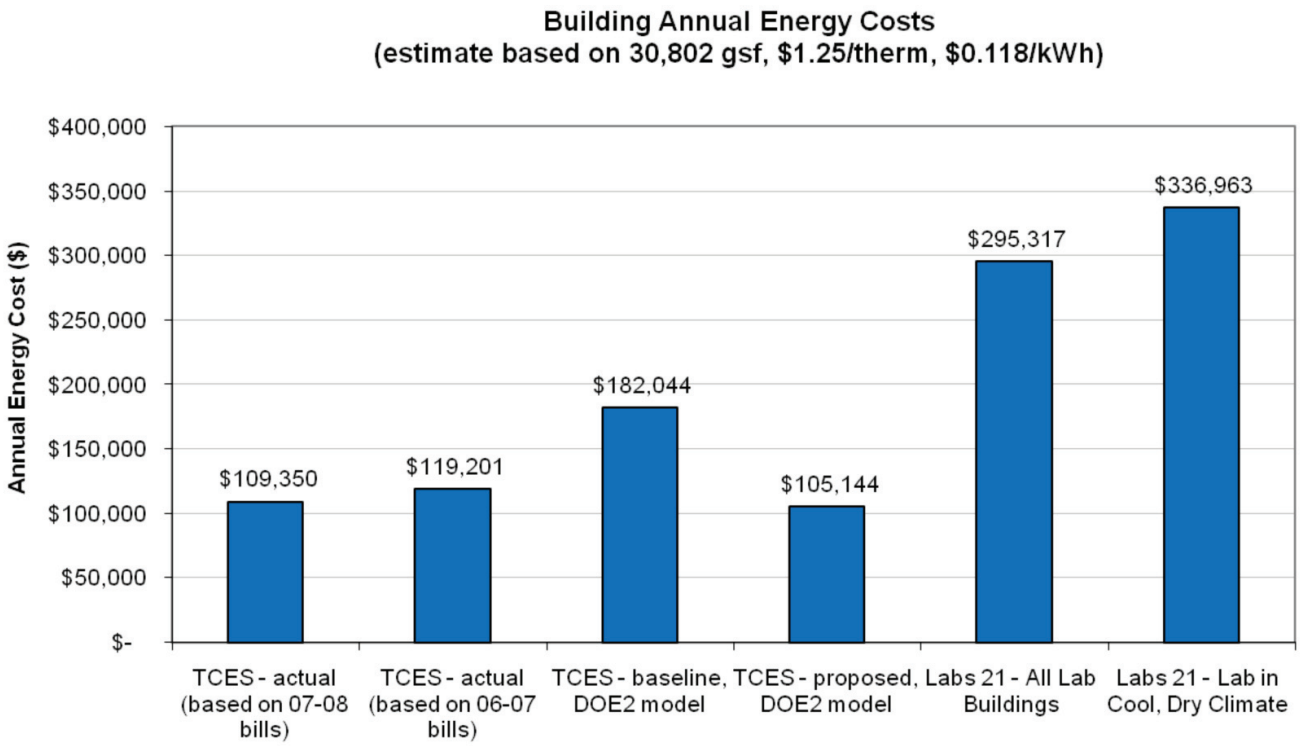

Figure A-5. Tahoe Center for Environmental Studies annual energy costs based on energy consumption. The chart shows the actual annualized energy bills and well as the modeled building and Labs21 benchmarking data.

Acknowledgments

Authors

Peter Rumsey, P.E.
Neil Bulger
Joe Wenisch
Tyler Disney
Rumsey Engineers

Contributors and Reviewers

Mike Walters
Affiliated Engineers, Inc.

Dan Amon, P.E.
U.S. Environmental Protection Agency

William Lintner, P.E.
U.S. Department of Energy

Paul Mathew, Ph.D.
Lawrence Berkeley National Laboratory

Technical Editing and Layout

Julie Chao
Alice Ramirez
Creative Services Office (CSO)
Lawrence Berkeley National Laboratory

Source for Images

Figure 1 (bottom), Figure 2 (bottom) and Figure 13 (right) were provided by Affiliated Engineers, Inc.
All other images provided by the authors.

For More Information

On Chilled Beams in Laboratories:

Peter Rumsey, P.E.
Rumsey Engineers
99 Linden Street
Oakland CA 94607
510 663 2070
prumsey@rumseyengineers.com

On Laboratories for the 21st Century

Dan Amon, P.E.
U.S. Environmental Protection Agency
1200 Pennsylvania Ave., N.W.
Washington, DC 20460
202-564-7509
amon.dan@epa.gov

William Lintner, P.E.
U.S. Department of Energy
Federal Energy Management Program
1000 Independence Ave., S.W.
Washington, DC 20585
202-586-3120
william.lintner@ee.doe.gov

Best Practices Guides on the Web

www.labs21century.gov/toolkit/bp_guide.htm

Laboratories for the 21st Century
U.S. Environmental Protection Agency
Office of Administration and Resources Management
www.epa.gov/labs21century/

In partnership with the
U.S. Department of Energy
Energy Efficiency and Renewable Energy
Federal Energy Management Program
www.eere.energy.gov/femp

Prepared at the
Lawrence Berkeley National Laboratory

June 2009