PNNL Chemical Hydride Capabilities

- PNNL Experimental capabilities in chemical hydrides:
  - Synthesis of materials
    - High pressure reducing atmospheric synthesis of chemical hydrides with dopants (Rapid thermal decomposition of precursors in solution & Rapid expansion of supercritical fluid solution)
  - Catalyst design and synthesis.
  - Environmental Molecular Science Laboratory: National User Center with a wide array of analytical tools with sample transfer system
    - Solid State NMR
    - Molecular Beam surface scattering
    - Analytical chemistry and surface analysis tools
    - Thin film preparation laboratory
    - Rutherford backscattering
    - FTIR spectroscopy
    - Catalysis and surface reactions
    - High resolution transmission and analytical electron microscopy
    - Hydrogen charging system
  - Microchannel reformer technology for enhancing reaction kinetics
  - Safety
  - Life cycle analysis and material compatibility

PNNL Computational Capabilities for H_2 Storage

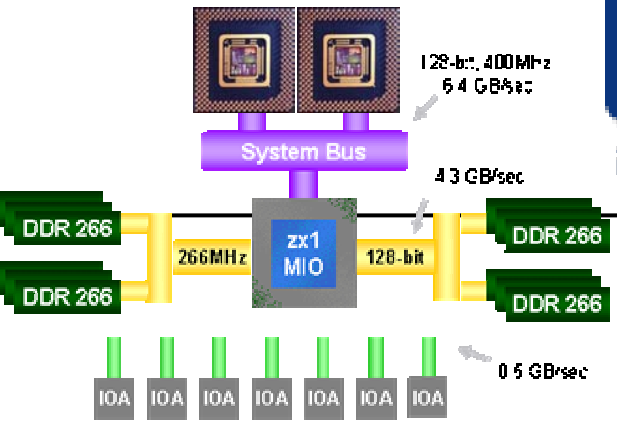

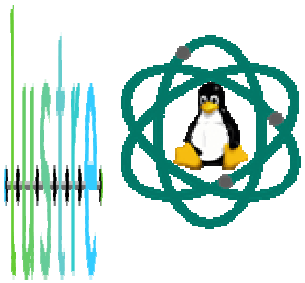

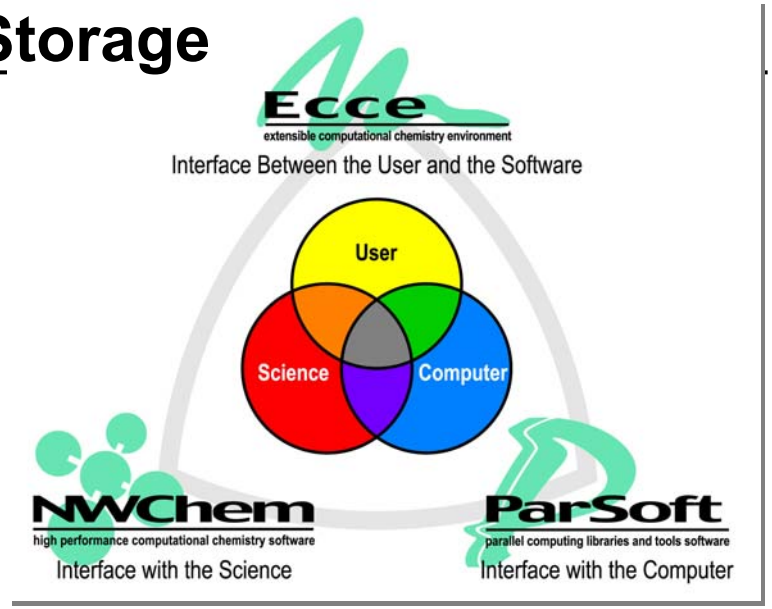

Molecular Science Software Suite

PNNL/EMSL/MSCF Supercomputer

- High perfomance HP Linux computer with 11+ TFlop peak
- 1900 Madison Processors, 7 TB memory, Quadric's Elan4, HP's ZX1 chip set, NWLinux, Gig-E connection to all nodes, 53 TB of global storage , 200 TB local disk, Lustre Lite File System

Computational Chemistry Applications

- High accuracy thermochemistry and kinetics for materials and catalyst design
- Solid state stability predictions based on accurate gas phase + lattice energy model
- Hydrogen mobility calculations
- Quantum chemistry, density functional theory, Car-Parinello, ab initio dynamics, variational transition state theory, molecular dynamics

Strategy

- Bring some of the best and brightest to tackle a very difficult problem.
  - Integration of synergistic capabilities of LANL, PNNL and university and industry partners.
  - Provide a mechanisms for university collaboration
  - Develop relationships and joint programs with key industry partners to ensure a smooth transfer to commercialization
  - Provide an environment where new concepts can be rapidly developed and tested
- Leverage key facilities and capabilities
  - CINT; LANSCE; Radiography; Supercomputing, modeling and visualization; High pressure, Energetic materials, Engineering testing, Science-based prediction
- Develop a center that provides DOE more for its investment than the same laboratories working separately or as individual PI research