May 4, 2005

Materials for Separation Technologies: Energy and Emission Reduction Opportunities

BCS, Incorporated
5550 Sterrett Place,
Suite 306
Columbia, MD 21044

Oak Ridge National Laboratory
Oak Ridge, TN 37830

Prepared for:

Industrial Technologies Program

U.S. Department of Energy
Energy Efficiency and Renewable Energy
Bringing you a prosperous future where energy is clean, abundant, reliable, and affordable

Acknowledgments

We gratefully acknowledge the support of the U.S. Department of Energy's Office of Energy Efficiency and Renewable Energy, Industrial Technologies Program. This study was carried out by Oak Ridge National Laboratory (ORNL), which is managed by UT-Battelle, LLC for the Department of Energy (DOE) under contract DE-AC05-00OR22725, and BCS, Incorporated under contract with DOE.

This document represents the valuable input of many individuals and organizations. We especially want to thank Sharon Robinson and Robert Jubin at ORNL, and Bill Choate of BCS, Incorporated for their work. We would also like to thank all those who contributed to this report including: Peter Angelini, Tim Armstrong, Robert Counce, William Griffith, Thomas Klasson, G. Muralidharan, Chaitanya Narula, and Vinod Sikka from ORNL, and the industrial experts working under subcontracts with ORNL: Gerard Closset, George Keller, and Jack Watson.

Disclaimer

This report was prepared as an account of work sponsored by an Agency of the United States Government. Neither the United States Government nor any Agency thereof, nor any of their employees, makes any warranty, expressed or implied, or assumes any legal liability or responsibility for the accuracy, completeness, or usefulness of any information, apparatus, product, or process disclosed, or represents that its use would not infringe privately owned rights. Reference herein to any specific commercial product, process, or service by trade name, trademark, manufacturer, or otherwise does not necessarily constitute or imply its endorsement, recommendation, or favoring by the United States Government or any Agency thereof. The views and opinions expressed by the authors herein do not necessarily state or reflect those of the United States Government or any Agency thereof.

Contents

Executive Summary i

1. Introduction 1

2. Separation Technologies 3

   2.1 Distillation 4
   2.2 Evaporation 5
   2.3 Drying 5
   2.4 Solvent Extraction 6
   2.5 Absorption 7
   2.6 Adsorption 7
   2.7 Membranes 7
   2.8 Pervaporation 10
   2.9 Crystallization 11
   2.10 Hybrid Separation Systems 11

3. Separation-Intensive U.S. Manufacturing Industries 12

   3.1 Chemicals 12
   3.2 Petroleum Refining 13
   3.3 Forest Products 15
   3.4 Mining 16

4. Energy Use and Emissions Evaluation 20

   4.1 Energy Evaluation Methodology 20
   4.2 Emissions Evaluation 21
   4.3 Industrial Applications Selected for Energy Use Evaluations 21

5. Opportunities for Improving Energy Efficiency and Reducing Emissions 23

6. Replacing High-Energy Separation Processes with Low-Energy Separation Processes 28

   6.1 Alternatives to Distillation 29
   6.2 Alternatives to Evaporation 35
   6.3 Improved Gas Separations 36

References 38

Glossary 41

Appendix A: Energy Data and Calcuations 45

Appendix B: Energy Consumption Evaluation Process and Calculations 49

Appendix C: Opportunities for Novel Separation Systems in the Forest Products Industry 69

Appendix D: High-Priority Separation Materials R&D Needs in the Chemicals and Petrochemicals Industries 87

Appendix E: High-Priority Materials R&D Needs Identified by the Chemicals Industries 99

List of Tables

Table A: Applications with Large Energy Savings Potential from Replacements with Low-Energy Separations vi

Table 2.1: Industrial Mass Transfer Separation Technologies 3

Table 2.2: Barriers to Devlopment of Membrane Materials for Industrial Applications 10

Table 3.1: Separation Technologies Used in the Mining Industry 17

Table 5.1: Industrial Applications with Potential for Alternative Low-Energy Intensity Separation Technologies 24

Table 5.2: Energy Requirements and Potential Savings from Replacement of Baseline Technologies with Low-Energy Alternative Technologies 26

Table 5.3: Energy Savings from Addition of Separation Technologies to Baseline Flowsheets 27

Table 6.1: Breakdown of Total Distillation Energy Consumption (2,400 Tbtu/yr) 28

Table 6.2: High-Energy Distillations Considered for Replacement 29

Table 6.3: Potential Applications for Hybrid Technologies Involving Membranes and Distillation 34

Table A.1: A Breakdown of Total Energy Consumed by U.S. Industries (2001) 45

Table A.2: Energy-Intensive Industries' Separation Energy and Total Energy Consumption 46

Table A.3: Separation Energy Distribution for Energy-Intensive Industries 47

Table B.1: Process Energy Requirements for Ethylene Production 50

Table B.2: Energy Utilization by Process Operation for Ethylene Production 51

Table D.1 High-Energy Distillation Processes with Potential for Replacement with Lower-Energy Alternatives 89

Table D.2 Proposed Emphasis Areas for Separation Technology R&D and Their Potential Impact on Energy Use 95

Table E.1 High Priority Materials R&D Needs Identified by the Chemical Industry 99

List of Figures

Figure A: Relative Energy Use by Various Separation Technologies i
Figure B: In-plant and Separation Energy Use for Energy-Intensive Industries iv

Figure 1.1: U.S. Industrial Energy Distribution 1
Figure 2.1: Membrane Configurations 9
Figure 3.1: Distillation Columns at a Petroleum Refinery 14
Figure 6.1: Zeolite Membrane: Crystallization of a Thin Zeolite Layer on Ceramic Support .. 32
Figure B.1: Petroleum Refining 53
Figure B.2: Ethylene Production 54
Figure B.3: Methanol Production 55
Figure B.4: Styrene/Ethylbenzene Production 56
Figure B.5: Phenol/Cumene Production 57
Figure B.6: Ammonia Production 58
Figure B.7: Caustic Soda/Chlorine Production 59
Figure B.8: Phosphoric Acid Production 60
Figure B.9: Oxygen/Nitrogen Production 61
Figure B.10:Lime Production 62
Figure B.11:Sodium Carbonate Production 63
Figure B.12:Paper Production 65

Foreword

The purpose of this report is to identify opportunities for new and advanced materials in separation technologies that will lead to large reductions in energy use and harmful emissions. The report is intended to be a useful strategic planning tool for conducting materials research and development for separation technologies and was prepared at the request of the U.S. Department of Energy Office of Energy Efficiency and Renewable Energy (DOE-EERE), Industrial Technologies Program (ITP).

Emerging separation technologies were reviewed for materials research opportunities, and the most energy-intensive process flow sheets in the chemical, petroleum, and forest products industries were evaluated for opportunities to implement improved separation technologies. This information was used to identify opportunities for new and advanced materials in separation technologies that would lead to large reductions in energy use and emissions.

This report provides background information necessary to develop realistic work plans for R&D of new and advanced materials to reduce energy usage and waste emissions for the existing industrial separation processes. While the report presents a compilation of critical research needs and opportunities, the data-gathering activities were limited by time, scope, degree of participation, and the boundaries imposed on the subject area. As a result, the report may not fully capture all the viewpoints. It should be recognized that reduction of energy used for separations can also be accomplished with new and advanced materials in up-stream reaction units (such as development of improved catalysts) which will lower the demands on subsequent separation steps, and also by combining separation and reaction into a hybrid unit operation. These were not addressed under the scope of this report. Further, the emerging and future industrial separations, such as the rapidly growing market for ethanol which requires an azeotropic energy-intensive separation; syngas separation; the hydrogen, carbon monoxide, and carbon dioxide separations critical for the "hydrogen economy;" and a more economical separation for oxygen enabled combustion, were not addressed in this report. Although efforts were made to incorporate a broad range of views, some valid ideas may have been excluded based on judgments made in combining and prioritizing information to produce a working document.

Information for this report was obtained through a variety of sources, including ITP planning documents, industrial vision and roadmap documents, science and technology needs surveys, and government funding agency reports. Industrial R&D needs were identified by reviewing vision and roadmap documents and through discussions with industrial organizations. Separations programs supported by U.S. Federal Government research funding agencies were reviewed to determine the state-of-the-art for materials-related technology. Industrial organizations were also contacted to obtain information on existing and future R&D in advanced separation technologies. Many of these inputs are summarized in the appendices.

Executive Summary

Separation technologies crosscut all manufacturing industries and account for approximately 4,500 trillion Btu/yr (TBtu/yr), or about 22% of all in-plant energy use in the United States. Innovations in separation technologies not only enhance productivity and global competitiveness of U.S. industries, but also are critical for achieving the U.S. Department of Energy Office of Energy Efficiency and Renewable Energy's (DOE-EERE) industrial energy and waste reduction goals.

This report evaluates opportunities for materials development for separation processes for the DOE-EERE Industrial Technologies Program (ITP) that will lead to substantial reductions in energy use (greater than one TBtu/yr) and emissions. **Focusing on the existing practices of the four largest energy consuming industries (chemicals, petroleum refining, forest products, and mining), this report identifies more than 240 TBtu/yr that could realistically be saved by developing new or advanced materials for low-energy intensity separation technologies.**

Separation Technologies: an Overview

The major industrial separation technologies are: distillation, evaporation, drying, extraction, absorption, adsorption, membrane, crystallization, and physical property-based operations (such as floatation and screening) (Figure A). Distillation, evaporation and drying technologies are high-energy intensity processes that are well established in industrial practice. They are thermally driven (based on the heats-of-vaporization of the components) and respectively account for 49%, 20%, and 11% of the industrial separations energy consumption. Extraction, absorption, adsorption, membrane, crystallization and physical property-based operations, on the other hand, are low-energy separation processes. None of these processes account for more than 3% of industrial separations energy consumption.

Figure A: Relative Energy Use by Various Separation Technologies

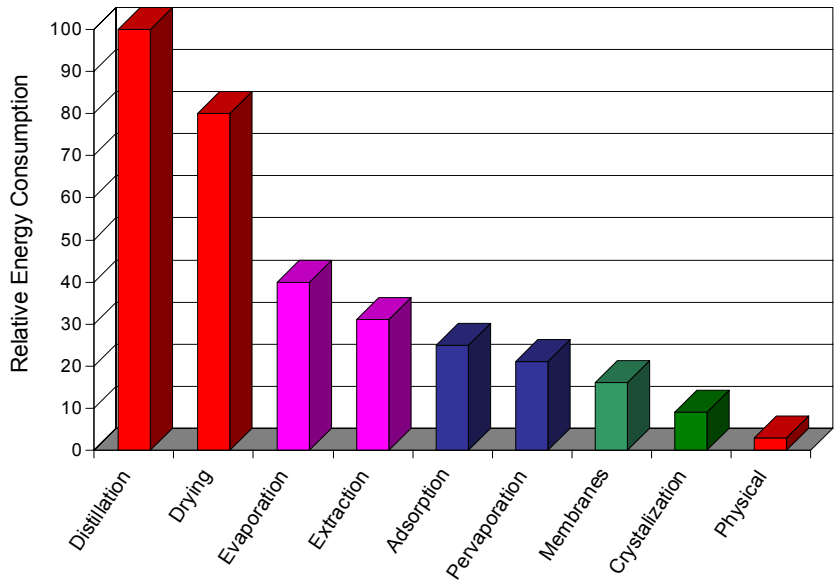

Materials broadly play two roles in separations technologies:

- **Structural Members** – Structural members perform containment and flow functions on the macro level. They include tanks, columns, distillation trays and packings, piping, housings, screens and other parts of separations equipment. Developing new materials for structural members with greater corrosion, erosion and wear resistance, and other enhanced properties will provide operational energy savings in terms of longer equipment lifetimes, fewer shutdowns, and novel equipment designs that conserve energy. However such structural improvements will result in limited energy reduction of the separation process.
- **Separation Agents** – Separation agents perform on the micro or molecular level interacting chemically and physically with the components requiring separation. They are the solvents, sorbents, ion exchange resins, molecular sieves and membranes that are instrumental to low-energy intensity separation technologies. Development of new and advanced materials separating agents can potentially lead to economically viable low-energy replacements for high-energy separation technologies, a path that offers substantial reduction in energy usage.

Planning for Materials R&D: Materials-Based Metrics Approach

The largest opportunities for energy reduction are offered by replacing high-energy separation technologies like distillation and evaporation with low-energy separation systems such as membranes, extraction, sorption, or with hybrid systems that use low-energy technologies to augment high-energy systems (as seen in Figure A). The possibility of such replacements hinge on developing materials suitable for use as separation agents which are an intrinsic part of low-energy separation processes. For low-energy separation processes to be eligible alternatives, the new separation materials must overcome the following barriers as they limit the potential of currently available materials:

- separation materials do not provide the selectivity required to achieve the desired separation;
- separation materials do not provide the throughput (flux, loading capacity, etc.) required for reasonable system economics;
- separation materials provide adequate throughput only over a short period, requiring extensive fouling prevention and cleaning regimes to maintain performance;
- separation materials are not sufficiently durable to maintain optimum performance under the harsh industrial environments (i.e., severe pressures, temperatures, corrosiveness, etc.); and
- separation materials and/or the equipment required to house the separation materials do not provide sufficient economies-of-scale incentive to be considered an alternative to established technologies in large-volume industrial processes.

Performance of a low-energy intensity separation system (membrane, solvent extraction, sorbent, etc.) is based on the chemical/physical interaction of the separation material and the components of the bulk process stream. This limits materials incorporated in separation systems to specific applications in the same way the performance of a catalyst is specific to the process stream and conditions under which it operates. Therefore, the pathway to developing new materials for improved

energy efficiency in industrial separation processes will, necessarily, be specific to a process. It is anticipated, however, that the research and scientific knowledge gained during materials development for a particular application will accelerate scientific advancement in other applications.

Multiple R&D pathways for overcoming material-based barriers to low-energy intensity separation technology are available. All of these pathways, however, must begin with an application-specific assessment of the working environment, operating conditions, failure modes, and performance requirements for economic insertion of a new separation technology into a large-scale industrial application.

The first step in any technology development pathway should be identification of metrics which define the targets for success. These target metrics will be industrial application-specific and will in most cases be driven by the final economics of the separation materials, housings, and systems design (although some applications will be driven by regulation). Once specific application metrics are defined, one or more of the following approaches may be appropriate:

- developing new or improving the existing materials to enhance selectivity, capacity and fouling resistance
- developing new or improving the existing materials to increase robustness to counter the effects of chemical attack and mechanical failure
- developing surface/pore modification techniques to enhance performance of the existing separation materials
- developing new or improving the existing materials, material composites, or material fabrication techniques for membrane, solvent extraction and sorbent and hybrid systems
- developing membrane material manufacturing techniques to produce thinner, defect-free membrane surfaces (more anisotropic, multilayer, etc.) to enhance solution/diffusion-limited membranes and to produce more controllable membrane pore size for advanced filtrations
- developing new or improving the existing sorbent materials that require less energy for product recovery and recycling
- developing novel solvent extraction materials (e.g., ionic liquids)
- developing separation process intensification concepts for new equipment designs that reduce size and capital costs
- demonstrating in-service evaluation of new and/or advanced separation materials

The new or improved materials when incorporated into large-scale separation systems will have to provide the selectivity, capacity, robustness and economics to meet industrial needs. Fine-tuning pathways and project metrics will be a continuous process as new information, project progress and data become available.

Opportunities Identified for Reducing Energy Consumption and Emissions

Identifying the new and advanced materials needs to improve energy efficiency requires examination of separation technologies used in thousands of different manufacturing processes. This task is simplified by limiting examination to the materials needs of low-energy intensity separation technologies and to the industrial processes known to consume significant quantities of energy. **This report focuses on the materials needs of low-energy intensity separation technologies that could potentially replace high-energy intensity technologies currently used in large energy consuming processes.** It does not attempt to examine new catalyst materials and other technologies that might change the separation needs of a process.

Chemicals, petroleum refining, forest products and mining are among the highest energy consuming industries (Figure B), accounting for 47% of total energy used by manufacturing industries. Incidentally, they also account for over 99% of the total energy associated with all industrial separation technologies, offering the most promising energy reduction opportunities.

Figure B: In-plant and Separation Energy Use for Energy-Intensive Industries

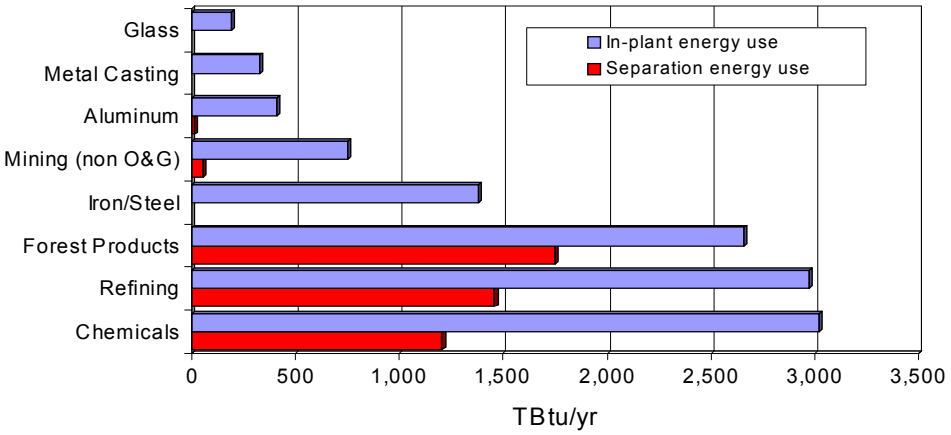

Source: Appendix A, Table A.2

This report examines twelve manufacturing processes for potential energy saving pathways:

- petroleum refining,
- paper production, and
- 10 chemical processes, nine of which use separations energy greater than 10 TBtu/yr

Together, these 12 processes account for 84% of the total industrial separation energy use. Evaluation of their process flow sheets indicated that over 240 TBtu/yr could realistically be saved if the current distillation and evaporation technologies were replaced with low-energy intensity or hybrid separation technologies.

Distillation operations in the chemicals and petroleum refining industries alone account for almost 53% of the total separation energy used. The United States has over 40,000 distillation columns operating in more than 200 different processes. The 10 chemical manufacturing processes addressed in this study consume 568 TBtu/yr in separations energy, and offer the greatest number of opportunities to save energy by replacing distillation technologies with low-energy intensity operations such as membranes, extraction, absorption, and hybrid systems. The potential savings from new materials amount to over 120 TBtu/yr. Fewer opportunities were identified for adsorption, advanced filtration, and crystallization for the chemical industry.

Petroleum refining, consuming 1,460 TBtu/yr in separations energy, is one of the most separation energy-intensive industries in the United States. Although distillation is the major consumer of energy in the refining industry, few practical low-energy intensity replacement opportunities were identified. Petroleum distillation is a mature technology that provides multiple products from a single column with substantial economies-of-scale. The majority of distillation in refining provides thermal (heat of vaporization) "cuts." Low-energy intensity alternatives to distillation use different separation mechanisms and would not yield the same products. Membranes and adsorbents could potentially replace distillation for relatively "clean" chemical separations such as gas recovery and yield 10 TBtu/yr in savings.

Opportunities in the forest products/paper production industry, which consumes about 1,800 TBtu/yr in separations energy, are dominated by replacement of drying and evaporation technologies. Drying paper consumes 36% of onsite (in-plant) energy and recovering pulping chemicals consumes 30%. No significant materials-based energy improvement opportunities for improving paper drying were identified. New and advanced materials' R&D to improve membrane and advance filtration technologies could augment evaporative operations and save up to 110 TBtu/yr. The forest products industry continues to minimize material discharges, relying on separation technologies for many of its recycling/closed loop operations (Appendix C). These operations will be important to the future of the industry but today, do not represent large opportunities for saving separations energy across the industry.

The mining industry consumes 60 TBtu/yr in separations energy, mostly associated with bulk physical separations (i.e. screening, floatation). Although new and advanced materials needs are significant in terms of improving mechanical, erosion and corrosion properties, no materials needs were identified that provided significant separation energy reduction for the mining industry.

This report identifies an additional 8 TBtu/yr of separation energy which could be saved by adding new separation steps to the basic process flow schemes of the existing manufacturing processes that were examined. These new separation steps would be used to enrich oxygen for fuel firing in furnaces and reformers (5 TBtu/yr) and to recover hydrogen and organic gases from refinery and petrochemical flares (3 TBtu/yr).

Recommended Path for Future Materials R&D

The greatest opportunities for energy reduction lie in replacing high-energy separation processes with low-energy separation processes. Successful capture of these high-value opportunities will most likely occur when R&D efforts focus on specific applications. R&D directed at the development of new and enhanced materials without a specific process focus is useful, particularly at creating new knowledge. However, results do not necessarily transfer to successful incorporation into industrial applications. Some specific applications where low-energy separation replacements could provide very large (> 1 TBtu/yr) reductions in energy consumption are listed in Table A below.

Table A: Applications with Large Energy Savings Potential from Replacements with Low-Energy Separations

Distillation Applications	Evaporation Applications
• olefin-paraffin separations: e.g. ethylene/ethane, propylene/propane, butadiene/butenes, styrene/ethylbenzene • removal of organics from water where azeotropes are formed: ethanol, isopropanol, butanol, etc. • recovery of dilute organics from water: acetic acid, ethylene glycol, methanol, many high-boiling polar organics • cryogenic air separation • polyol separations: ethylene glycol/diethylene glycol, ethylene glycol/ propylene glycol • isomer separations	• concentration of phosphoric acid in phosphoric acid production • concentration of black liquor in pulp and paper production • concentration of caustic soda

All low-energy intensity separation technologies (extraction, adsorption, absorption and membrane) depend on a material's properties interacting with the chemical constituents of an industrial stream to perform the separation. The current application of these low-energy intensity separation technologies to industrial streams has been limited by the material's performance and/or cost. The pathway to increasing the application of low-energy intensity separations requires developing new and advanced materials along with the knowledge of how to incorporate these agents in standalone or hybrid separation systems.

1. Introduction

Energy consumption in the United States is characterized by its use in four sectors – industry, transportation, residential and commercial. The industrial sector is the largest energy-consuming sector, utilizing 32,770 trillion Btu/yr (TBtu/yr) in 2001, or over one-third of the total energy consumption in the United States. Figure 1.1 shows the distribution of this energy usage among the various U.S. industries. Thirty nine percent of industrial energy, or 12,750 TBtu was associated with generation, transmission, and distribution losses and with feedstock energy (energy associated with fossil fuels that are used as a material rather than a fuel). Approximately 20,000 TBtu/yr is consumed within industrial plant boundaries (in-plant) for the heat, power, and electricity used in processing operations (Appendix A, Table A.1). Energy savings in-plant automatically result in additional energy savings external to the plant.

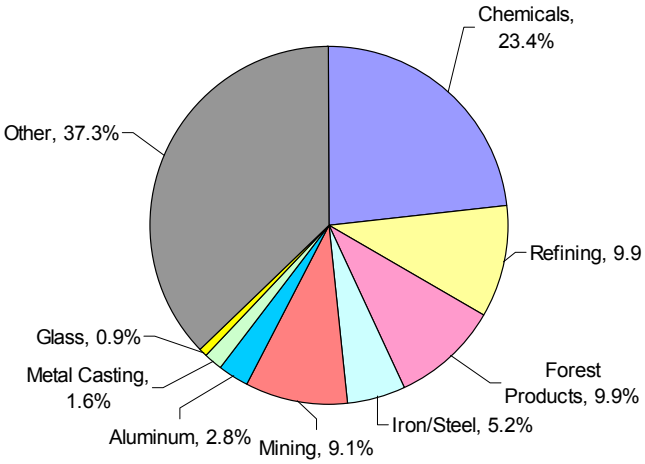

Figure 1.1: U.S. Industrial Energy Distribution

How much is 1 trillion Btu?

It is equivalent to:
16,199 journeys made around the Earth's equator in a Toyota Prius Hybrid averaging 50 mpg
or
40,135 tons of coal - this would require over 400 railcars, stretching the train over a distance of 3.8 miles

Separation technologies crosscut all manufacturing industries and account for 22% of all in-plant industrial energy use (approximately 4,500 TBtu/yr) in the United States. Innovations in separation technologies are critical to the productivity and global competitiveness of U.S. industries, as well as in achieving national energy and waste reduction goals.

The availability of appropriate materials is often critical to the successful realization of a new engineering, technology, or process concept. The success or failure of many industrial energy efficiency concepts, in particular, depends on the selection of suitable materials and fabrication techniques because of the severe demands on materials performance imposed by industrial operations. Materials development is essential to achieving major improvements in separation technology, necessary for raw materials utilization and waste reduction.

The purpose of this report is to evaluate opportunities for materials development in separation technologies that will lead to large reductions in energy use and industrial emissions. The objective is to provide a realistic estimate of the amount of energy that can be saved by implementation of new separation technologies in industrial processes and identify materials research needed to overcome the

barriers to such implementations. Separation operations used by the energy-intensive manufacturing industries were identified (see Figure 1.1 on page 1), those that consume large energy were determined, and then, the potential and practical amounts of energy savings associated with industrial separations were projected. Opportunities for realistic energy improvements by implementation of new separation technologies were then identified, along with barriers and possible pathways needed to shift from energy-intensive separation technologies to low energy alternatives.

The evaluations in this report were limited to the replacement of existing separation technologies with more energy efficient technologies. Significant energy saving opportunities could also be achieved through improved materials in reaction unit operations (such as catalysts), which impact subsequent separation steps in the process flow sheets, and by coupling reactions and separations into hybrid unit operations. These were not addressed under the scope of this report. Also, opportunities related to the emerging and future industrial separations, such as the rapidly growing market for ethanol which requires an azeotropic energy-intensive separation; syngas separation; hydrogen, carbon monoxide, and carbon dioxide separations critical for the “hydrogen economy;” and a more economical separation for oxygen enabled combustion, are not evaluated in this report. Industry's sustained pursuit of better environmental performance provides several additional opportunities for significant energy savings. The paper industry's desire for closed water loop systems, the chemical and refining industry's desire to lower discharge level, and the mining industry's desire to lower discharge levels and pursue in-situ mining technologies, all require material advances in separation technology. They are recommended to be included in future studies.

2. Separation Technologies

Separation technologies are broadly classified into:

- physical operations used for separation of particles and larger objects (e.g., screens, cyclones, floatation, etc.)
- mass-transfer operations used for separation of macromolecules and smaller molecules (e.g., distillation, absorption, drying, etc.)

Mass-transfer operations, thermodynamically and practically, are orders-of-magnitude more energy intensive per unit of output than physical separations. Accordingly, this report focuses on mass transfer operations where new and advanced materials can contribute to greater energy efficiency improvements. The major industrial mass-transfer separation technologies are described in Table 2.1.

Table 2.1: Industrial Mass Transfer Separation Technologies

Separation Technologies	Material's Primary Role	Energy Intensity	Technical Status
Distillation is a thermally driven process based on the boiling points of constituents. It takes advantage of differences in the vapor-liquid equilibrium to effect a separation of components that are fully miscible.	structural member	high	established
Evaporation is a thermally driven process used to separate nonvolatile solutes from volatile solvents to produce a concentrated solution or thick liquor. The volatile solvents do not need to be separated into fractions.	structural member	high	established
Drying is a thermally driven process that differs from evaporation in that the residue is typically a solid.	structural member	high	established
Extraction is used for separating components based on differences in their solubility in a solvent. The components are typically recovered from the reusable solvent in a second thermally driven operation.	separation agent	medium	established
Absorption involves the penetration of components into the bulk of a solid or liquid. The absorbed component is then recovered thermally or chemically in a second operation and the absorbent is reused.	separation agent	medium	established
Adsorption is the collection of a component on the surface of a solid or a liquid. The adsorbed component is then recovered thermally or chemically in a second operation and the adsorbent is reused.	separation agent	medium	established
Membranes use a variety of mechanisms ranging from size sieving to solution/diffusion properties to effect a separation. These processes are often pressure driven.	separation agent	low	emerging
Pervaporation is a membrane process in which the permeate stream is in the gas phase.	separation agent	low	novel
Crystallization is thermally driven, but based on heat of fusion as opposed to the more energy intensive heat of vaporization process. A substance is concentrated by precipitation of crystals from a solution.	structural member	low	established

Distillation, evaporation and drying are mature, well-established technologies that account for 80% of the industrial separation energy use (no other technology listed consumes more than 3% of the total separation energy used by industry). These technologies utilize materials as structural members and not as agents to the separation. New and advanced materials for distillation, evaporation and drying technologies can improve corrosion, erosion and mechanical strength of structures. These improvements provide some measure of overall operational and energy efficiency improvement, but they are not of the magnitude associated with replacement of these technologies with low-energy intensity separation technologies.

Solvent extraction, sorbent and membrane separations are accomplished based on the differences in chemistry, and the physical and thermodynamic properties (heat of solution) of the components to be separated. Their driving forces are significantly lower (one or more orders of magnitude) than those for distillation, evaporation and drying. These technologies use materials as separating agents and are inherently lower in energy intensity. Solvent extraction and sorbent technologies require an additional thermal or chemical step to recover the separated component and prepare the solvent or sorbent material for reuse, making these technologies more energy intensive than membrane systems. While extraction and sorbent technologies are mature and well-established, membrane systems operate only in some niche applications (e.g. reverse osmosis for seawater and brackish water desalting, ultrafiltration for whey protein concentration), as they in general do not yet have the necessary material properties, such as tolerance for high temperature and aggressive chemicals, or the economies-of-scale needed for energy-intensive industrial applications.

Crystallization is a thermally driven process that is used for concentrating and purifying industrial products (e.g. ascorbic acid, citric acid, and xylene). Materials are used as structural members in this technology. It is a mature technology and is frequently employed for products requiring high purity. The energy associated with crystallization's driving forces (heats of fusion) is typically significantly lower (one or more orders of magnitude) than distillation, evaporation and drying, and somewhat lower than solvent extraction, sorbent and membrane separations.

2.1 Distillation

Distillation is a process for isolating components from a mixture based on differences in their boiling points. It is by far the most widely used separation process for mixtures that can be vaporized, with approximately 40,000 distillation columns in operation in the United States. Distillation processes are widely used for the separation of organic chemicals and for the separation of gases, usually at cryogenic temperatures, as in the production of oxygen and nitrogen from air. It constitutes 90%–95% of all separations in the chemicals and petroleum refining industries. Example applications include: multicomponent fractionation of crude oil into petroleum gas, gasoline, fuel oil, naphtha, and asphalt; separation of air into nitrogen and oxygen; separation of ethyl benzene from styrene, olefins from alkanes, and alcohols or acids from water.

The advantages of distillation are in its simple flowsheet, low capital investment, and low risk. If components to be separated have a relative volatility of 1.2 or more and are thermally stable, distillation is typically the separation method of choice. The disadvantages of distillation are its low energy efficiency and that it requires thermal stability of compounds at their boiling points. Large energy savings could be obtained by replacing distillation with low-energy intensity operations. The most promising technologies for replacement of distillation include membranes, extraction, sorption (absorption and adsorption), and hybrid systems. These technologies are described below.

2.2 Evaporation

Evaporation is a separation process that takes advantage of the nonvolatile nature of some components in a mixture and simply boils away the volatile components, though it does require thermal stability of the nonvolatile compounds. It is a mature technology and typically a low-capital, low-risk operation. Large energy savings can be obtained by replacing evaporation with low-energy intensity technologies, or by using low-energy intensity technologies upstream to reduce evaporative loads. Evaporation is a common separation process used in the concentration of caustic soda (NaOH), paper pulp black liquor, fruit juices and for production of table salt (NaCl). About 5.5 million tons of solar evaporated salt are produced annually in the United States.

2.3 Drying

Drying is a separation process that differs from evaporation in that the end product is typically a solid. In general, drying involves the removal of relatively small amounts of water or other liquid from a solid material or concentrated slurry to reduce the content of the residual liquid to an acceptably low value. Drying is a relative term in that the dried product may still contain liquid and the liquid content of a dried substance varies from product to product (e.g., table salt contains about 0.5% moisture, coal 4%, etc.). If completely dry, a product is frequently referred to as "bone dry."

Liquids or moisture are commonly separated from solids physically by presses and centrifuges and then if additional drying is needed, thermally by vaporization. Dryer feed materials may consist of dilute solutions of solids in water, liquid slurries of suspended solids, colloidal suspensions, gels, pastes, or heavy cakes of wet solids. Products are dried to free-flowing powders, granules, agglomerates, or mats (sheets). Proper drying equipment and handling is fundamental to obtaining the best production yield and product quality.

Thermal drying is energy intensive since the heat of vaporization must be supplied to the liquid phase. Numerous technologies are used for thermal drying e.g., freeze drying, spray drying, fluidized bed drying, flash drying, infrared drying, microwave drying and solar drying. Solar drying is commonly used for fruits, vegetables, fish, salts, fertilizer, etc. Other thermal drying processes which consume fossil fuels and electricity produce:

- pulp, paper, and paperboard;
- polymers and resins;
- organic chemicals (e.g., adipic acid, cellulose acetate, oxalic acid, tannin, etc.);
- pharmaceuticals (e.g., aspirin), dyestuffs and pigments;
- inorganic chemicals (ammonium phosphate, calcium sulfate, kaolin, silicate, zeolite, etc.);
- detergents;
- pesticides, fertilizers and related agrochemicals; and
- ceramics and related products.

Paper represents one of the largest volume products for drying technologies. Over 950 TBtu are consumed annually. Conventional paper machines dry paper by passing the paper over heated metal cylinders. When the paper sheet enters the paper machine dryer section it is about 50% water. It must be dried to less than 10% water for a finished product. Paper drying requires about 1,275 to 1,575 Btu/pound of water removed.

2.4 Solvent Extraction

Solvent extraction is a separation technique involving two immiscible liquid phases. In liquid-liquid extraction, components of a liquid mixture are separated based on their different solubilities in a solvent. One of the two phases, the solvent phase, extracts the solutes from the other liquid phase. There are two requirements for liquid-liquid extraction to be feasible: (1) components to be removed from the feed must preferentially distribute in the solvent, and (2) the feed and solvent phases must be substantially immiscible. Solvent recovery and raffinate (or the residual liquid) cleanup follow the separation. There is usually more than one possible method of purifying the solvent and raffinate phases, so process design is application-specific.

Liquid-liquid extraction can offer energy savings, and can be operated at low to moderate temperatures and near atmospheric pressure. However, the major disadvantage is that it requires a solvent recovery process, which is typically energy-intensive distillation. Also, this technology presently uses relatively large equipment sizes and large solvent/sorbent inventories, and provides low throughput relative to thermal technologies. Therefore, besides improving the mass separating agents, new equipment design is important to make technology implementation economically feasible. Equipment miniaturization and processing schemes that decrease cycle-time must be developed to reduce required solvent/sorbent inventory and capital requirements.

Liquid-liquid extraction is typically used to separate azeotropes and components with overlapping boiling points where distillation cannot be used. There are approximately 1,000 extractor systems in the United States. Today one of the most common extraction applications is the separation of the water-ethanol azeotrope to produce pure ethanol which is used as an additive for gasoline.

2.5 Absorption

Absorption typically refers to the transfer of one or more components of a gas phase to a liquid phase in which the gaseous component is soluble. There are three types of absorption processes: separation based on physical solution, separation based on reversible chemical reaction, and separation based on irreversible chemical reaction. Absorption processes require extensive areas of liquid surface to be in contact with the gas phase. A common example of the absorption process is the washing of ammonia from a mixture of ammonia and air.

2.6 Adsorption

Adsorption consists of the selective concentration of one or more components of either a gas or a liquid mixture on the surface of a material, typically a microporous solid (adsorbent). The adsorbed components (adsorbate) are then desorbed in a second step, usually called a regeneration step. In general, adsorbents will have high surface area per unit weight (100 m^2/g to 10,000 m^2/g) to facilitate high loading onto the solid surface. Adsorption is based on the adsorbent's strong affinity for one or more components of mixture to be separated. The adsorbate held by the solid surface is subsequently desorbed and the adsorbent freed for further adsorption. The process is cyclic, alternating between adsorption and desorption. Desorption involves weakening of the bonds between the adsorbates and the adsorbent which is achieved by raising the temperature, reducing the pressure, adding another component that competitively adsorbs with the adsorbate, or a combination of these strategies.

Adsorption processes have the advantage of being able to produce quality products with concentrations of contaminants in the parts per billion range. They effectively remove low and high molecular weight organics and have process flow rates up to several hundred gallons per minute. The main disadvantage is that the concentrations of components to be removed are limited to several hundred parts per million in fixed bed processes. Adsorption beds will also plug when subjected to excessive concentrations of solids.

Adsorption processes have a wide range of applicability throughout the chemical, petroleum, and allied industries for use in gas and liquid purifications and bulk separations. A large amount of heat is liberated when a material adsorbs and consumed when the material desorbs from the solid adsorbent. For bulk separation the heat release issue is an important process design parameter. Common examples of adsorption processes include: ion exchange, dehumidification of air, recovery of solvent vapors, decolorization of petroleum products, and carbon adsorption of colored components from sugar and water.

2.7 Membranes

Membrane processes physically separate a feed stream into two components by allowing one phase to pass through the membrane (the permeate) while retaining a portion of the feed (the retentate). The transportation (selectivity and flux) of components between permeate and retentate phases is

controlled by the materials properties of the membrane and the operating conditions. The component flow through the membrane relies on one or more forces such as those created by a gradient in chemical potential, pressure, or electrical potential. Membrane processes do not involve a phase change (with the exception of pervaporation systems) and do not require heat of vaporization as in distillation, or specific heat of fusion as in crystallization. Therefore, highly selective membranes can accomplish separation with considerably less energy than other methods.

Membranes have several potential broad applications. They could be a replacement technology for distillation, an energy saving preconcentration stage for evaporation and drying, and an advantageous means of colloidal and solids filtration. In some cases, membranes can also substitute for sorption and solvent extraction processes.

Membrane system performance is a function of the process operating conditions, the nature and chemical composition of the process stream, and the membrane material's chemical composition and morphology. Most current R&D focuses on developing new membrane materials and morphology, though some R&D is also directed at controlling specific process conditions and process stream composition in order to take advantage of the existing membrane materials.

The intrinsic performance characteristics of a membrane material are its selectivity and flux. These characteristics are controlled by the membrane's material composition and morphology. Membrane performance in industrial systems is, however, considerably different from its intrinsic characteristics as the system performance is dramatically impacted by the process operating conditions and the nature and chemical composition of the process stream. Operating conditions and stream composition together create solute and/or particle concentrations near the membrane surface (concentration polarization) that are significantly different from the bulk of the process stream. These dynamic surface conditions control the ultimate flux and selectivity of the system, and hence, determine the final performance of a membrane system. These dynamic conditions are controllable to some degree by the system design and are usually reversible. However, the bulk composition and surface concentrations under some operating conditions can result in irreversible deposits, fouling and damage to the membrane material.

Industrial membrane system design involves not only the selection of the proper membrane material and module configuration (see Figure 2.1), but also optimization of operating conditions (feed velocities, temperature, staging, etc.), bulk stream pretreatment (removal or stabilization of foulants), and the ability to clean membranes when necessary.

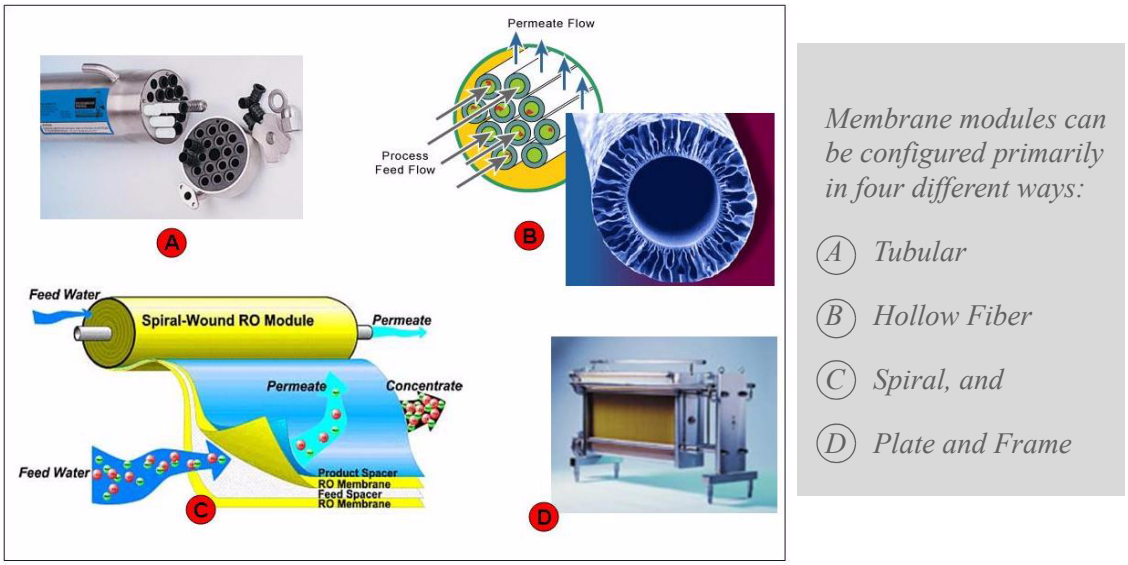

Figure 2.1: Membrane Configurations

Since the intrinsic performance properties that result from the material composition and morphology are seldom the controlling factors in industrial applications, it is difficult to develop membrane materials without having a specific target application. The target application can rapidly narrow the potential choice of materials. This report focuses on those applications in which new separation material technologies could provide a substantial reduction in energy consumption per unit of product produced.

Membrane materials are easily divided into two categories, organic and inorganic. Early organic materials R&D produced cellulosic and acetate based membranes which were not chemically robust. Newer organic membranes are available in polysulfone, polyethersulfone, polyvinylidene fluoride (PVDF, KYNAR®), polypropylene, polytetrafluoroethylene (PTFE), polyacrylonitrides, and other polymers which have good chemical resistance but are typically limited to application under 150°C. Inorganic membranes have the potential to operate at higher temperatures (500°C) and their materials include sintered alumina, stainless steels and zeolites (structures that contain aluminum, silicon, and oxygen). Some research has been directed at building multicomponent, copolymer and composite membranes in attempts to take advantage of specific organic/inorganic materials properties.

Additionally, some R&D has been focused on building “dynamic” membranes. In these systems, a membrane layer is dynamically formed on a substrate. Once the membrane layer is fouled or has lost its separating properties, it can be removed (sometimes by back flushing) and dynamically reformed.

Major barriers to membrane materials development for industrial applications are summarized below in Table 2.2.

Table 2.2: Barriers to Devlopment of Membrane Materials for Industrial Applications

Performance Properties:		**System Properties:**
• selectivity • flux/capacity • fouling resistance		• boundary layer formation and control • permeate path carrying capacity • packing density (membrane area per module volume) • clean-in-place • limited economies-of-scale (membrane area scales linearly)
Mechanical Properties:		
	Organic	**Inorganic**
• pressure	compaction	n/a
• temperature	compaction, rate of chemical attack	rate of chemical attack
• pH	hydrolysis, rate of chemical attack	rate of chemical attack
• microbes	biological attack and fouling	biological fouling
• solvents	compaction, swelling, dissolution	dissolution
• mechanical stress/shock	rupture	rupture/fracture
• thermal stress/shock	rupture	rupture/fracture
• colloids	irreversible sorption	irreversible sorption

It should be noted that a full accounting of the energy benefit must include the transmission and generation losses of the driving systems. For example, in pressure-driven systems such as membrane, the in-plant energy intensity is lower than in thermally-driven separation systems (e.g., distillation). However, in the case of using electricity-driven pumps, nearly 10,000 Btu are required to deliver 3,412 Btu (1 kWh) of in-plant energy.

2.8 Pervaporation

Pervaporation is a membrane-based separation process in which the feed and retentate streams are both liquid phases while the permeant emerges at the downstream face of the membrane as vapor. The feed is supplied at slightly elevated temperatures and a vacuum is applied to the permeate side generating a pressure gradient to allow permeation; the permeated vapors are condensed immediately and collected as a liquid. Commercial applications include dehydrating azeotropic mixtures but are limited to separating only small quantities since the driving forces for permeation are small. A larger-scale application will require increased membrane surface area and/or several heat exchangers to make up for the heat used up to vaporize the permeating component of the feed stream. Both these disadvantages make pervaporation technique economically undesirable for wider use.

2.9 Crystallization

Crystallization is essentially a solid-liquid separation technique. Separation takes place when one or more components of a liquid become “supersaturated” and precipitate out from the liquid in the form of crystals. Supersaturation refers to a state in which the liquid mixture contains more solids (solute) than can ordinarily be dissolved at that temperature.

Crystallization is used to achieve several functions: separation, purification, concentration, and solidification. Since the heat of fusion is typically much lower than the heat of vaporization, considerable energy savings can be realized in applications where crystallization is an effective means of separation. Solutes can be recovered from solutions by reducing the solubility through cooling, heating, evaporation, chemical reaction, or by adding a nonsolvent to the mixture.

The main disadvantage of crystallization is the high surface areas needed to establish heat transfer rates that control the crystal growth rates. This results in typically high operation and maintenance costs, and large space requirements. Applications include paraffin wax purification, separation of meta-xylene from para-xylene, and separation of benzene and coal-tar. Crystallization is also used in the production of salts (LiCl, NaCl, KCl,...), urea, citric acid, boric acid, adipic acid, ascorbic acid and saccharin.

2.10 Hybrid Separation Systems

Replacing distillation and evaporation systems with hybrid systems is likely to be more easy technically and economical than totally replacing distillation/evaporation systems with alternative technologies. For example, most membrane processes today cannot produce the high-purity products required of distillation applications. However, it may be possible to make technical advances in improving overall energy efficiency by using membranes for a preconcentration or polishing step integrated with traditional distillation. Recent advances in the development of new solvents, such as ionic liquids, potentially make extractive distillation a viable alternative. Also of interest are distillation-adsorption hybrid processes involving a rough separation with distillation followed by polishing with adsorption.

Research is needed to support design of new hybrid systems (such as field-enhanced distillation, reactive and extraction distillation, and membrane reactors). This includes use of better separating agents (sorbents, solvents, and membranes) in new equipment designs needed to integrate the separating agents into the distillation equipment.

Hybrid systems may also provide a low-risk approach to developing new separation materials. Hybrids that can be retrofit to, and easily coupled and decoupled from existing production units would provide facilities with energy improvements (and debottlenecking opportunities) without risking the normal production.

3. Separation-Intensive U.S. Manufacturing Industries

Separation technologies are used throughout the industrial sector and account for about 4,500 TBtu/yr or 22% of the sector's in-plant energy use in the United States. Over 99% of this energy is consumed by separations in the chemicals, petroleum, forest products, and mining industries (Figure B on page iv).

Chemicals, petroleum refining, forest products, and mining industries together account for approximately 47% of the energy used by U.S. industries, 70% of industrial air emissions, and 50% of waste emissions. These industries use separation technologies to separate and purify products of reactions, recover and recycle valuable components, and separate contaminants from dilute streams prior to discharge. Since most separation technologies utilized are energy intensive, these industries offer major opportunities for new technologies that conserve energy, recover valuable processing chemicals, and reduce wastes and emissions.[1]

Manufacturing process flow sheets used in the chemicals, petroleum refining, forest products, and mining industries were reviewed to determine present energy use, potential energy savings, and practical energy saving opportunities for implementing improved separation technologies which could be developed through materials research. Although there are significant differences between individual refineries and individual forest products facilities, each industry relies basically on one process flow scheme and new technologies for energy reduction can generally be applied across these industries. Conversely, the chemicals industry produces over 70,000 process flow schemes and new technologies seldom apply across multiple categories of chemicals. However, a handful of large volume processes dominates the energy consumption by the chemical industry. The 10 chemical processes reviewed in this report account for over 60% of the energy use in chemical industries.

3.1 Chemicals

The chemicals industry consists of a collection of manufacturers that transform raw materials into more than 70,000 diverse compounds. These chemicals are part of almost every product we use today, including plastics, paper, paints, cleaners, adhesives, pharmaceuticals, cosmetics, textiles, building materials, food packaging, appliances, and electronic devices. In 2001, energy consumption in the chemical industry totaled 7,700 TBtu, which represents 6% of all domestic energy use and 23.5% of the total U.S. manufacturing energy use. Energy use in the chemical industry is split almost evenly between in-plant heat and power, and feedstock energy for production of petrochemicals, plastics, and other products. Energy consumption varies widely among the many processes used to produce chemical industry products. A few processes (e.g., sulfuric acid production) are net producers of energy. Petrochemical and other organic chemicals account for 35% of the energy usage; plastics and resins, 19%; inorganic chemicals and fertilizers, 15%; and other products 31%.

Transforming raw materials into usable chemical products requires chemical, physical, and/or biological separation. These involve synthesis processes that typically consume large amounts of energy to heat, cool, or run motive systems. Separations play a critical role and account for 40% to 70% of both capital and operating costs, and approximately 40% of the chemical industries' energy usage. The most widely used separation process, distillation, accounts for as much as 30% of the industry's overall energy use [2] and 90% to 95% of separation energy. Other technologies used include extraction, absorption, adsorption, crystallization, drying and membranes.

Chemical synthesis, predominantly heterogeneous catalytic processes, is the backbone of the chemicals industry. During the last decade, significant improvements have been made in their energy efficiency; improved catalysts and separation technologies have played a major role in these improvements and continue to offer scope for further reduction in energy use. Distillation columns, for example, the mainstay of the industry, often operate with considerably low thermodynamic efficiency. Evaporation is also an energy-intensive process where substantial energy reductions could be achieved through replacement with low-energy intensity alternative technologies or hybrid systems.

In 1997, the chemicals industry accounted for 31% of the toxic waste emissions and 17% of the greenhouse gas emissions produced by the manufacturing sector in the United States. Carbon dioxide, the largest component of greenhouse gas, is predominantly produced by fossil fuel combustion for heat and power. Improved separation technologies can be expected to reduce the amount of waste emissions, particularly in the area of separation from dilute streams, and should reduce the amount of fossil fuel required by the industry for energy production, thus reducing the amount of greenhouse gases produced.

Specific areas where materials development has applicability for separations in the chemical industry are discussed in Opportunities for Improving Energy Efficiency and Reducing Emissions section (page 23). They include replacement of high-energy intensity separation processes, distillation and evaporation, with low-energy intensive alternatives or hybrid systems.

3.2 Petroleum Refining

Petroleum refining consumed about 3,200 TBtu of energy in 2001. It is the second largest manufacturing industrial consumer of energy in the United States, accounting for approximately 10% of the total manufacturing energy use. Petroleum refineries produce a variety of fuels and products, but essentially all operate using the same basic processes. The petroleum refining industry uses crude oil and natural gas as fuels to supply heat and power for plant operations and as a raw material for the production of petrochemicals and other non-fuel products.

Before crude oil can be used it is sent to a refinery where it is physically, thermally, and chemically separated into fractions and then converted into finished products. About 90% of these products are fuels such as gasoline, aviation fuels, distillate and residual oil, liquefied petroleum gas (LPG), coke, and kerosene. Refineries also produce non-fuel products, including petrochemicals, asphalt, road oil, lubricants, solvents, and wax. Bulk petrochemicals (ethylene, propylene, benzene, and others) are shipped to chemical plants, where they are used to manufacture chemicals and plastics.

Refinery operations fall into four major categories – separation, cracking, reforming, and blending of hydrocarbons. How major processes are used varies considerably from refinery to refinery, as well as within an individual refinery, depending on the product slate that is desired. The major separation processes are: atmospheric and vacuum distillation, solvent deasphalting, sulfur removal, and gas recovery.

Figure 3.1: Distillation Columns at a Petroleum Refinery

Crude oil is distilled in tall steel towers called pipe stills that have a series of horizontal trays along their height.

Atmospheric and vacuum distillations account for 35% to 40% of total process energy consumption associated with crude oil refining. Crude oil is a complex hydrocarbon mixture. Every barrel of crude oil entering the refinery must be subjected to an initial separation by distillation (Figure 3.1). Atmospheric and vacuum distillations provide the first separation cuts of crude oils into products. The products from these cuts contain a less complex mixture of hydrocarbons, and are characterized primarily by their specific boiling ranges. Distillation remains the best process for making thermal and rough molecular size cuts. Other separation processes typically function by utilizing specific chemical and physical differences of the components' molecules. Atmospheric and vacuum distillation processes are highly developed (thermally optimized) and the development and use of alternative separation processes is very unlikely, at least in the near future. Even if more attractive and energy efficient alternatives were developed, the high capital costs and slow rate of refinery replacement would slow implementation.

Products from atmospheric and vacuum distillation undergo further processing downstream. These downstream products require additional separation operations. These separations are based on chemical property differences and offer some opportunity for alternative separation processing.

In 1997, the petroleum industry accounted for 3% of the toxic waste emissions and 17% of the greenhouse gas emissions produced by the manufacturing sector in the United States. Improved separation technologies can lead to reduced waste emissions, particularly in the area of separation from dilute streams, and reduced fossil fuel requirements by the industry for energy production, thus producing less greenhouse gases.

Specific areas where materials R&D can contribute to reduction in energy consumption and emissions, are discussed under Opportunities for Improving Energy Efficiency and Reducing Emissions section (page 23), and in Appendix B, section B.2. Improvements in gas recovery offer the largest opportunities. Refining is such a large user of energy that small percentage improvements in atmospheric or vacuum distillation will have a major impact on overall energy savings (each percent saving in separation energy equates to a savings of 10 TBtu/yr).

3.3 Forest Products

The forest products industry consumed more than 3,200 TBtu of energy in 2001, which represents almost 10% of the total U.S. manufacturing energy use. Within the forest products, the pulp and paper industry uses 95% of this energy and is the third largest industrial consumer of both fresh water and energy.[3]

In 1997, the forest products industry accounted for 11% of the toxic waste emissions and 10% of the greenhouse gas emissions produced by the manufacturing sector in the United States. Improved separation technologies will reduce the amount of waste emission and the amount of fossil fuel required by the industry for energy production, thus reducing the amount of greenhouse gases produced.

The two most energy-intensive separation operations requiring process heat are evaporation to concentrate black liquor (2,100 Btu/lb for multiple evaporators and 2,600 Btu/lb for direct contact evaporators), and drying to remove water from wet paper mat (3,100 Btu/lb). Significant energy saving opportunities could be achieved if multi-effect evaporators for concentrating black liquor are replaced with low-energy intensity separation processes or hybrid systems. These opportunities are discussed further in the Opportunities for Improving Energy Efficiency and Reducing Emission section of this report (page 23). Other separation opportunities, such as water recovery and recycle, are beyond the scope of this report, but are discussed briefly in Appendix C.

3.4 Mining

The United States has the largest mining industry in the world. Coal, metals (such as iron, lead, zinc, alumina, copper and gold) and many industrial materials (cement, lime, phosphate, sand, gravel, crushed stone, etc.) are mined in the United States. Once material is removed from underground or surface mines it must be processed (crushed, ground, cleaned, sized, extracted, etc.) into products. Many mining operations utilize separation technologies as part of their upgrading process.

The U.S. mining industry (excluding oil and gas production) consumed about 1,300 TBtu in 2001. The Energy Information Agency estimates the mining industry to consume 4% of the total energy used by all U.S. industries. Energy costs are an important component to the mining industry; it has been estimated to be about 5% of the value of all commodities produced or 24% of the total cost of supplies for the industry.

Mining operations are typically broken down into three stages: extraction, materials handling, and beneficiation. Energy use among the mining stages is estimated at 19% for extraction, 42% for materials handling, and 39% for beneficiation (Mining Industry E&E Profile, page 1-20). Separation in mining can be broadly categorized into mechanical, physical, and chemical/biological processes. Mechanical separation, such as crushing, grinding and milling, present limited potential opportunities for new and advanced materials to improve energy efficiency and lower emissions. Numerous physical/chemical separation processes (Table 3.1) are utilized in mining operations, some of which could benefit from materials research and development. The “Beneficiation and Processing” stage accounts for the majority of the separation energy used in mining, approximately 5% of the total mining energy used or 60 TBtu in 2001.

Table 3.1: Separation Technologies Used in the Mining Industry

Physical Separations	Chemical/Biological Separations	Environmental Control Separations
Size-Size Separations: • screening • classification Solid-Solid Separations: • flotation • selective flocculation Magnetic/Electrostatic: • gravity separation Solid-Liquid Separations: • thickening • centrifugation • filtration • drying	Leaching: • chemical solution • biological solution Concentration and/or Purification: • solvent extraction • ion exchange • precipitation • adsorption Product Recovery: • electrolysis • cementation • precipitation • crystallization	• sulfur • trace elements • fugitive dust • acid mine drainage • impoundments • recycling water

The largest energy consuming physical separation operations are flotation and screening. These are electrically powered processes, and have large onsite and offsite electrical efficiency losses. Other major physical separation operations are: centrifuges, magnetic separators, filters and cyclones. These technologies can benefit from better erosion- and corrosion-resistant materials. However, the resulting energy efficiency impacts are difficult to be quantified, and are considered to be small relative to impacts from using new or improved materials in mass-transfer operations.

Opportunities for improved energy efficiency in mining include: new agents/catalysts for leaching; improved solvent extraction, ion exchange, and adsorption processes for concentration and purification; and electrolysis, membranes, new processes for gold-copper separation, and crystallization for product recovery. Similar opportunities also exist in separations involving water evaporation, and for replacement of air-fuel burners in smelting and calcining operations with oxygen-enriched fuel burners.

Mined materials such as potash and trona are typically separated from water by evaporation in ponds. The evaporite mineral industry has evaluated the use of multiple-effect evaporators and found these to be costly in terms of energy and capital. This has prevented their acceptance by the industry. Evaporative R&D primarily focuses on low-cost liners for ponds and more efficient settling basins for solar evaporation ponds.

Membranes and crystallization technologies are alternatives to evaporation systems. The large volumes, high osmotic pressures and sparingly soluble salts in many streams make membrane systems impractical. Membrane surface fouling is frequent. The development of more robust, lower cost and self-cleaning membrane systems would aid their acceptance by the industry. Crystallization schemes can be complex as they are impacted by changes in concentration, temperature, and/or pressure. A larger knowledge base is needed in basic crystallization sciences and engineering in order to fully assess these processes for the mining industry.

Separation technologies may become more important to the mining industry in the future. In-situ mining is the removal of the valuable components of a mineral deposit without physical extraction of the rock. In-situ mining is currently used for uranium extraction and has the potential to be used with other minerals. Typically the mineral components are leached directly from the mine via a series of inflow and outflow wells. The leachate is then processed with chemical and evaporative separation techniques to recover the valuable component. The in-situ technique is considered a “greener” form of mining since most of the mining activities take place underground and there is little impact to the surrounding surface areas. However, it is not yet economically competitive with traditional extraction techniques. If use of in-situ mining grows, separation use will grow and energy conservation will become an important factor.

Water management (supply and disposal) is becoming a critical issue in the mining industry. Many factors affect whether water is viewed as a valued resource or as a nuisance that requires management and disposal. These factors are: regional climatic conditions, the type of mineral being mined, the processes operated at the mine and local regulatory considerations. Resolution of water issues may require significant energy use to perform separation on streams with very dilute components. Dilute component separation can be very energy intensive.

Water use in mining operations can be divided into three categories: mining (extraction), downstream processing, and mineral conveyance (slurry pipelines). Relatively little water is used in actual ore production. However, very significant quantities of water can be involved in keeping the mining faces open and operations running. Generally mining face waters are disposed of with minor treatment, if any, into wells or ponds. The handling of mining face waters typically does not require energy-intensive separation technologies. Mine ore processing, such as screening, grinding and milling, requires significant amounts of water for their operation and for dust control. Processing these waters which contain fine dust and dissolved minerals can be difficult and energy intensive. The degree of processing water treatment depends on its ultimate fate, reuse or disposal. After ore is crushed, the

mined product can be transported as an aqueous slurry through a pipeline to a processing plant some distance away. The amount of energy necessary to transport the slurry over the required distance is defined by the slurry volume and density, friction losses along the pipeline, and the distance necessary for conveyance. Slurry transport can cause depletion of water resources at the point of origin and introduce contaminants into the water during conveyance that makes the water undesirable at the final destination. Slurry pipeline dewatering separation technologies are becoming more crucial for energy savings in this area of mining operations.

4. Energy Use and Emissions Evaluation

4.1 Energy Evaluation Methodology

A major component of this study is to provide a realistic estimate of the amount of energy that could potentially be saved in industrial processes through implementation of improved separation technologies. There are a variety of benchmarks that are used differently by various analytical groups to determine the energy consumption and environmental impact of product manufacturing. Two commonly used energy evaluation methods are as follows:

- **Value chain analysis** is an integral part of a Life Cycle Assessment (LCA). It allows for the capture of the direct energy and feedstock inputs at each processing step or link in a production cycle to build a cumulative value along the chain. This methodology provides valuable information and data values for organizations performing a complete LCA. LCAs are important to ensure that process improvements in one area are not merely shifting the energy and environmental burdens to another area.
- **On-site energy values** are based on actual process measurements taken within a facility. These measurements are valuable because the on-site values are the benchmarks that industry uses to compare performance between processes, facilities, and companies. More importantly, these on-site process measurements are used to assess the value of new processes and practices, and are critical in making decisions on adopting new technologies.

This report uses on-site energy values to provide a realistic estimate of energy savings and to identify opportunities where new materials technology could result in significantly lower energy consumption.

Further evaluation of the many opportunities that exist for reducing energy consumption can only be made by comparing processes using consistent system boundaries and measures. Therefore, evaluations in this report had to be based on data and information obtained in a consistent manner. A review of relevant literature indicated that much of the energy usage data for the production processes of the chemicals, petroleum refining, forest products and mining industries were obtained by different methods, and could not be readily used for comparative analyses. One report, *Analysis of 108 Industrial Processes*,[4] contained the most consistent methodology for determining energy use in industrial manufacturing processes, and it was used as the basis for energy use evaluations in this report. It should be noted that only incremental improvements have been made to the process flow sheets since *Analysis of 108 Industrial Processes* was written.

Each manufacturing process was examined in terms of total energy consumed, and each discrete unit operation was evaluated in terms of its contribution to the total energy consumption. The energy input into the plant was also evaluated in terms of the application, i.e., reaction operations, separation operations, chemical heat of reaction, and energy conversion. The process flow sheets were then reviewed for opportunities to make substantial improvements to the separation processes by the

application of alternate technology. Estimated energy savings were calculated by applying reduction factors for the alternative technologies. These factors were obtained from literature references[5,6,7] and best estimates by technical experts.

Energy estimates for the manufacturing processes are shown in Appendix B. Alternative technologies for the processes that had potential energy savings of greater than 1 TBtu/yr if materials R&D is pursued, are discussed in Section 5.0 of this report (Opportunities for Improving Energy Efficiency and Reducing Emissions).

4.2 Emissions Evaluation

Normally, energy efficiency improvements proportionally reduce the emissions of CO_2 gas generated from fossil fuel combustion and electricity generation. This general assumption was used to assess waste reduction opportunities for separation technologies. Opportunities are discussed in general terms for each industry in Section 5.0 (page 23). If implemented, the 240 TBtu/yr that were identified as potential energy savings from new materials for separation technologies would lower the CO_2 equivalent emissions by approximately 4,800,000 tons/yr.

4.3 Industrial Applications Selected for Energy Use Evaluations

The manufacturing processes used in the chemicals, petroleum refining, forest products and mining industries were reviewed to determine total energy use, energy use by separation processes, and potential energy savings from new improved materials for separation technologies. The effort focused on the most energy intense processes used in these industries in order to identify areas where focused R&D will have the greatest opportunities for impact. Primarily, manufacturing processes with separation energy use of greater than 10 TBtu/yr were the focus of this study.

Forest Products

Pulp and paper making processes account for 95% of the forest product industry energy usage. Three major pulp and paper processes were evaluated for energy savings. The kraft pulp process, a chemical pulping method, is the primary pulp producer accounting for about 80% of all pulp produced in the United States. This process also forms the basis for the integrated paper mill process. Mechanical pulping is a distant second at about 15%. Technologies to improve the separation in the integrated paper mill, which accounts for over 50% of the forest products industry plant-wide energy use are the primary focus of this study.

Petroleum Refining

Petroleum is processed in refineries where it is physically, thermally, and chemically separated into fractions and then converted into finished products. Refinery operations fall into four major categories: separation, cracking, reforming, and blending of hydrocarbons. The major separation processes are atmospheric and vacuum distillation, and solvent deasphalting. Distillation accounts for approximately 40% of the energy use. Technologies to improve distillation and gas separation were the focus of the evaluations in this study.

Chemicals

Unlike many industries, the chemical industry is characterized by a wide variety of products and processes. This industry transforms raw materials into more than 70,000 diverse products, and there can be several routes for the manufacture of a single product, so that energy use for a particular product might vary significantly across companies. Even within the same company, more than one process might be used in the manufacture of a single chemical. Energy, water, and emissions may be reported in global numbers for the industry, but evaluations for potential energy savings must be done at process flow sheet level. Therefore, energy evaluations were performed for a variety of chemical process flow sheets. The effort focused on the most energy-intensive separation processes within the largest energy users in the chemical industries. Ten of the top 25 (by production) chemical flowsheets were evaluated in detail: ammonia, caustic soda/chlorine, phenol/cumene, methanol, ethylene, lime, nitrogen/oxygen, phosphoric acid, soda ash, styrene/ethylbenzene. These ten chemical processes account for approximately 61% of the chemicals industry's energy use. The remainder of the chemical processes were reviewed in less detail through literature and industrial expert reviews.

Mining

The main energy consuming separation processes in the mining industry are flotation and screening. These technologies can benefit from improving structural materials (materials with better corrosion and erosion properties), but the resulting energy efficiency impacts from such improvements would be small. Therefore, no new materials needs were identified for the mining industry that could contribute towards significant reduction in separation energy.

5. Opportunities for Improving Energy Efficiency and Reducing Emissions

This report provides a realistic estimate of the potential amount of energy that can be saved by developing new and advanced materials for separation technologies used in industrial processes; and identifies research needed to overcome the barriers to implementation. Separation processes in the chemicals, petroleum refining, forest products and mining industries consume approximately 47% of the in-plant energy and over 98% of the separation energy used by U.S. industries (Figure B, page iv). They are, therefore, the focus of this report.

The field of separation-process research, development, and commercialization in these industries can be considered to have reached a mature state. The industries have made energy and emissions reductions over the last decade, often by making incremental improvements to existing technologies and implementing industrial best practices programs. It will become harder to achieve major energy savings through these approaches in the future. Therefore, this report focuses on identifying high-opportunity materials R&D in separation processes that could lead to large reductions in energy consumption (greater than 1 TBtu/yr). Additional areas that offer incremental improvements in existing technology, apply to single industries, and/or result in substantially less energy savings are included in the appendices.

Manufacturing process flow sheets used by the chemicals, petroleum refining, and forest products industries were reviewed to determine present energy use, practical energy saving opportunities for implementing improved separation technologies based on materials research, and the resulting energy savings. The results are summarized in Tables 5.1 (page 24) and Table 5.2 (page 24).

Table 5.1: Industrial Applications with Potential for Alternative Low-Energy Intensity Separation Technologies

	Distillation	Evaporation	Membranes	Extraction	Adsorption & Ion Exchange	Absorption	Filtration	Gas Treatment†	Hybrid Systems	Untreated Waste
Petroleum Industry										
Gas recovery	*		Δ			Δ				
Hydrogen recovery			Δ							*
Chemicals Industry										
Phenol/Cumene	*		Δ	Δ		Δ			Δ	
Ethylene	*		Δ	Δ	Δ				Δ	
Methanol	*			Δ				*	Δ	
Styrene/Ethybenzene	*		Δ						Δ	
Ammonia			Δ	Δ	Δ	*				
Caustic Soda		*	Δ							
Nitrogen/Oxygen	*		Δ						Δ	
Phosphoric Acid		*	Δ	Δ						
Lime			Δ					*		
Sodium Carbonate			Δ					*		
Forest Products Industry										
Black Liquor Concentration		*	Δ				Δ		Δ	

* - *Existing technology*
Δ - *Energy-saving alternative technology*
† - *Generated from air-fueled furnaces to be replaced by oxygen-fueled furnaces with pretreated oxygen-enriched feed*

Table 5.1 shows alternative low-energy separation technologies with the potential to replace current high-energy separation processes for various applications. Although there are significant differences between individual refineries and forest products facilities, these industries rely basically on one process flow scheme. New technologies for energy reduction in these industries can therefore be applied generally across the entire industry. In the forest product industry, the potential energy saving opportunities are dominated by replacement of evaporation technologies with improved membrane and advanced filtration technologies. In petroleum refining industry, although distillation is a major consumer of energy, few practical opportunities were identified for replacement of the technology; membranes and absorption could potentially replace distillation for relatively small and “clean” separations, such as gas recovery. Since the chemical industry has over 70,000 process flow schemes, new technologies seldom apply across multiple categories of chemicals. Therefore, evaluations were carried out on those few large-volume processes that dominate the energy consumption in the

chemical industry (over 60% of total in-plant energy usage by the industry as shown in Table 5.2). Distillation and evaporation technologies are used in a wide variety of these processes, and the best opportunities for replacement of these technologies include membranes, extraction, adsorption, and hybrid systems. Fewer opportunities were identified for absorption.

Table 5.2 and Table 5.3 show the results of energy estimates described in Section 4.1 and Appendix B. These estimates indicate that over 240 TBtu/yr could realistically be saved if high-energy intensity separation technologies were replaced with low-energy intensity alternatives or by hybrid systems in the selected applications (Table 5.2). An additional 8 TBtu/yr separation energy could be saved by adding new membrane separation steps to baseline processes to enrich oxygen in feed to furnaces and reformers (5 TBtu/yr), and by recovering hydrogen gas from petroleum flare gas if improved membranes were available (3 TBtu/yr) (Table 5.3),

Table 5.2: Energy Requirements and Potential Savings from Replacement of Baseline Technologies with Low-Energy Alternative Technologies

	U.S. Annual Production *(Billion Pounds/yr)*	Total U.S. Process Energy Required *(TBtu/yr)*	Total U.S. Separation Energy Required *(TBtu/yr)*	Potential U.S. Energy Savings *(source:Appendix B)* *(TBtu/yr)*
Chemicals Industry				
Ethylene	52	500	120	55
Caustic Soda	25	400	200	4
Ammonia	29	200	50	15
Styrene/Ethybenzene	11	200	40	10
Phosphoric Acid	24	200	50	6
Lime	41	100	1	0
Sodium Carbonate	23	90	20	0
Methanol	7	50	10	2
Phenol/Cumene	5	50	30	8
Nitrogen/Oxygen	68	47	47	23
Sub-Total	285	1837	568	123
Chemicals Industry Total	2,400	3,019	1,208	
Percent Studied in this Report	12%	61%	47%	
Petroleum Refining Industry				
Atmospheric and Vacuum Distillations	1,958	710	710	0[1]
Cracking, Reforming, LubeOil, Asphalt and Viscosity Breaking	2,218	695	695	0[1]
Gas Recovery	45	54	54	10
Sub-Total[2]	4,221	1,459	1,460	10
Refining Industry Total[2]	4,503	2,974	1,460	
Percent Studied in this Report	94%	49%	100%	
Forest Products Industry				
Black Liquor Concentration	1,203	797	797	110
Paper Drying	2,329	956	956	-
Sub-Total	3,532	1,753	1,753	110
Forest Products Industry Total[3]	194,784	2,656	1,753	
Percent Studied in this Report	2%	66%	100%	
Energy-Intensive Industries Total *(see Appendix A)*		11,723	4,497	
Percent studied in this report		**74%**	**84%**	
Total Potential Energy Savings for Processes Studied in this Report				**243**

1 Materials as structural members (e.g., trays, packings, heat exchangers, etc.) can reduce separation energy in these operations when utilized in new configurations. The potential for new or advanced structural materials to contribute to energy reduction is considered small since these are mature technologies and have been the subject of much optimization. Materials acting as separation agents (e.g., membranes, sorbents, etc.) perform based on the chemical composition of the streams being treated. They are unlikely to be utilized in refining operations since most refinery separation operations are based on temperature and not compositional differences.

2 U.S. refineries processed approx. 1,868 billion lbs of crude oil in 2001. Crude oil goes through multiple operations, therefore, the sum of the amount of mass that is processed by individual operations exceeds the total mass of material entering the refinery.

3 The forest products industry handles over roughly 20 billion cubic feet of wood annually. Construction materials consume approx. half of all wood harvested and paper about 30%. Over 80% of the forest products industry energy consumption is associated with pulp, paper, and paperboard manufacturing.

Table 5.3: Energy Savings from Addition of Separation Technologies to Baseline Flowsheets

	U.S. Annual Production *(Billion Pounds/yr)*	**Total U.S. Process Energy Required** *(TBtu/yr)*	**Total U.S. Separation Energy Required** *(TBtu/yr)*	**Potential U.S. Energy Savings** *(source:Appendix B)* *(TBtu/yr)*
Petroleum Refining Industry				
H_2 Recovery				3
Chemicals Industry – Enrich O_2 for feed to furnaces and reformers				
Methanol				1
Lime				3
Sodium Carbonate				1
Total Potential Energy Savings				**8**

6. Replacing High-Energy Separation Processes with Low-Energy Separation Processes

The greatest opportunities in reduction of energy consumption and lowering emissions associated with chemicals, petroleum refining, and forest products industries will be obtained by replacing current distillation and evaporation technologies, which operate at thermal efficiencies as low as 6%. This low efficiency implies that there is a huge potential for significant process improvement that could increase energy and environmental performance. Evaporation, which accounts for 20% industrial separations energy, is dominated by a few processes, e.g., black liquor concentration in paper mills, and to a lesser extent by chemical processes such as phosphoric acid and caustic soda production. On the other hand, distillation is used widely throughout the chemicals and petroleum refining industries, as shown in Table 6.1.

Table 6.1: Breakdown of Total Distillation Energy Consumption (2,400 Tbtu/yr)

Feed	Typical Components Light/Heavy Key	Distillation Energy Consumption
Petroleum	gasoline/naptha	26%
Crude oil	light naptha/heavy naptha/light distillate	22%
Liquefied petroleum gas (LPG)	ethane/propane/butane	11%
Olefins	ethylene/ethane, propylene/propane	6%
Miscellaneous hydrocarbons	cumene/phenol, acetone/acrylonitrile	5%
Water—oxygenated hydrocarbons	methanol/water, water/acetic acid	5%
Aromatics	ethylbenzene/styrene, benzene/toluene	4%
Water—inorganics	ammonia/water	3%
Air	nitrogen/oxygen	1%
Water—hydrocarbons	*p*-xylene/water	1%
Other		16%

Source: Humphrey and Keller, Separation Process Technology, McGraw-Hill, 1997, page 292

Membranes, extraction, adsorption, advanced filtration, and hybrid systems offer the largest opportunities for energy reduction by replacing distillation and evaporation. In essentially all cases, the barriers to replacement of distillation and evaporation fall into four categories:

- insufficient selectivity by the material agents (membranes, extractants, etc.) to achieve the desired separation,
- inability of the material agents to maintain performance under the harsh industrial environments (i.e. pressures, temperatures, corrosion),
- inadequate throughput by the material agents to provide reasonable system economics, and/or
- insufficient economic incentive to consider the improved process technologies as replacement technologies.

Chemicals and petroleum refining are mature, highly capital-intensive and competitive industries. These factors and the long economic life of existing facilities are deterrents to the development of economic, large-scale, non-conventional, energy-saving separation technologies to replace older processes, or to make possible new paths to products. The economic realities of replacing existing equipment must be incorporated in technology development planning, particularly if energy saving results are desired in the near term (< 15 years).

To overcome the market acceptance and economic barriers described above, new and advanced separation materials must be developed with vastly superior performance (higher selectivity, higher flux, etc.). In addition, the separating materials and the equipment housings in which the process operates must be more tolerant of harsh environment. However, improvement in the separating agents as well as the materials of construction for the processing equipment are likely to increase the costs of the alternative processes, making replacement economics unfavorable. Therefore, new equipment design may be required to make new technology implementation economically feasible.

6.1 Alternatives to Distillation

Distillation accounts for approximately 2,400 TBtu/yr, consuming roughly the same amount of energy as all the other separation processes combined. Thus, a major research focus for energy efficiency should be on reducing energy usage per unit of product in distillation, especially in separations with low relative volatilities (e.g., 1.5 or less), or those that operate at cryogenic or very high temperatures (Table 6.1). Examples of large-scale chemical production processes evaluated in Appendix B where distillation could be potentially replaced by alternative technologies include: cumene production with cumene, phenol, benzene, and acetone separators; ethylene production with cryogenic distillation for acetylene, methane, and ethane separations; methanol production, which includes methanol and dimethyl ether separations; styrene production with ethyl benzene, styrene, and benzene separations; and gas recovery in petroleum refining. If successful, the total estimated energy savings in these applications alone would be of the order of 80 TBtu/yr.

Table 6.2: High-Energy Distillations Considered for Replacement

Olefin-paraffin separations: ethylene/ethane, propylene/propane, butadiene/ butanes, styrene/ ethylbenzene, etc.
Removal of organics from water where azeotropes are formed: ethanol, isopropanol, sec.-butanol, etc.
Recovery of dilute organics from water: acetic acid, ethylene glycol, methanol, many high-boiling polar organics
Cryogenic air separation
Polyol separations: ethylene glycol/diethylene glycol, ethylene glycol/ propylene glycol

Adapted from Table D.1 in Appendix D

The most promising technologies for replacement of distillation include: membranes, extraction, absorption, and hybrid systems, which combine technologies, often an alternative technology with distillation, to reduce energy usage. For applications as alternatives to distillation, new technologies must be designed that can withstand temperatures of up to 1200°F, pressures of up to 400 psi, and humid (steam) and highly corrosive environments.

Extraction and Absorption

Solvent extraction and absorption have traditionally been characterized by relatively large equipment sizes per unit throughput compared to distillation, and require large solvent and absorbent inventories. For solvent extraction and absorption to become economically competitive with distillation, improved solvent and absorbent materials, and new equipment designs will be required.

New solvents and absorbents must have high selectivity and yield with the durability to withstand harsh environments. They must also have greater resistance to chemical and thermal degradation, improved solubility and emulsification characteristics, and they must be developed so that they can be "tuned" to be highly selective for specific separation applications. Advances in kinetics, thermodynamics of coordination chemistry, and structural chemistry (solid and solution) will be required to produce "designer materials" for extraction. The chemical and physical properties of liquid/liquid interfaces is a neglected area of research, but one that will be required to address the long standing problems associated with the formation and cleanup of interfacial emulsions associated with solvent extraction.[8]

A number of promising solvents exist. One such category consists of pi-bonding materials such as cuprous ion[9] and silver ion.[10] Solutions of these ions, both aqueous and non-aqueous, have been shown to be extremely selective in reversibly complexing olefins such as ethylene and propylene compared to their corresponding paraffins. Today these olefins are virtually universally separated by difficult, massive-scale distillation from their corresponding paraffins, with very large expenditures of energy per pound of olefin. Other unusual solvent systems for extraction-based alternatives to distillation-based separation might include crown ethers and their derivatives, which can act as molecular sieve cavities for certain compounds and as special agents for separating chiral mixtures of compounds.

The majority of energy consumption for solvent extraction processes is in the reboiler, associated with the distillation column required to recover the solvent from the extraction stream. Development of new solvents and absorbents that will not require thermal regeneration should also be considered. Ionic liquids, such as the pi-bonding materials discussed above, are a new emerging group of solvents that have the potential to be regenerated without using distillation. Ionic liquids are, for the most part, still in the discovery stage of research. Additional research into the design of ionic liquids, their long-

term performance in an industrial environment, scale-up for commercial production, and incorporation into processing equipment would be required before they could be implemented industrially.[11]

These new classes of highly selective, resilient solvents and absorbents are likely to be more expensive than traditional materials, making the economics for replacing existing distillation units even worse than for traditional solvents. Equipment miniaturization and ways to decrease cycle-time must be developed in parallel with improvements in separating materials to reduce the costs of the capital equipment and overall costs of solvents/absorbents through reduced inventory requirements.

One potential way to accomplish process intensification is through the use of rotating contactors. Rotating contactors reduce the solvent inventory in the extractor by one to two orders of magnitude compared to more conventional extractors, and greatly speed up the rate of inter-phase mass transfer. These characteristics lead to a much shorter residence time in the extractor than is typical, and this in turn can lead to dramatically reduced solvent inventories, provided that the volume of the equipment exterior to the extractor can also be reduced. A major benefit is that such compact extractors recycle the solvent many times more often per unit of time than is typical in more conventional extractors. This ability markedly reduces the required solvent inventory, since that inventory is inversely related to the number of times the solvent can be recycled per unit of time.

Some relatively new types of rotating contactors[12,13] for solvent extraction have been developed and are being produced commercially by CINC.[14] Such contactors have been in use for processing nuclear wastes for a number of years and are being proposed for a large new application.[15,16] Although the venerable Podbielniak extractor and other such extractors represent even more compact units, they are not as scalable to large throughputs as are the rotating contactors. A company that makes contactors similar to those of CINC is Rousselet-Robatel.[17] However, few examples of their use in the chemical and petrochemical industries exist; equipment modification and demonstration would be required before they could be implemented in these industries.

The same generalization holds true for absorption, given the likelihood of being able to develop small contactors for this separation. The overall gains in absorption, however, are not likely to be as dramatic as those projected for solvent extraction.

Membranes

The greatest limitations to application of membrane separation technology for distillation replacement are their lack of selectivity, the narrow range of useful operation conditions, and their high costs. Most organic membrane modules are limited to a relatively narrow temperature (45°C to 60°C) and pH (4 to 10) ranges, and are quickly attacked by organic solvents and corrosive gases encountered in many distillation applications. The development of new materials, most likely inorganic materials or inorganic/organic composites, is necessary if membrane separations are to

achieve their full potential for applications where distillation is the standard unit operation. Important properties for emerging membrane material include permeability, selectivity, durability (compaction), resistance to fouling, impact strength, flexibility, thermal stability, transport properties, clean-in-place, and module scale-up. Membranes with higher selectivity and flux that can withstand aggressive organic mixtures at relatively high temperatures (ranges of 27°C to 649°C) will be required. Optimally these membranes should have molecular sieving capabilities similar to zeolites.

Research areas that should be considered for the ITP Materials subprogram include:

- **Inorganic membranes:** Potential opportunities include ceramic membranes, nano-structured membranes, and zeolite membranes. Inorganic metallic molecular sieving membrane technology has high potential as an alternative to distillation. These membranes also have potential use in molecular-sieving for gas-component separations (Figure 6.1), high-temperature gas-particulate separations, and a range of liquid separations. Research requirements include refinement of the fabrication process to reduce defects in large area membranes, durability and reliability testing of the membranes, and erosion and corrosion resistance of membranes under long-term test conditions. To date, there has been no development of ceramic membranes for high-temperature applications, such as distillation. Materials that can operate with the desired selectivity and flux would need to be developed. The challenge for ceramic membranes to meet selectivity criteria will be extremely high for separation of large molecules and similar size molecules.

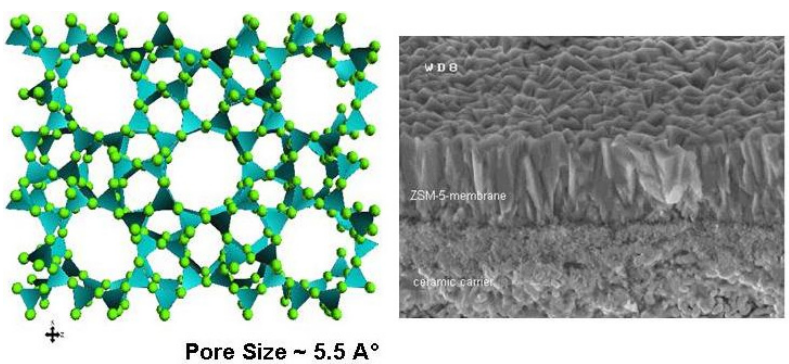

Gas separation can be achieved by molecular sieving on zeolite membranes. This MFI silicate membrane with a pore size of ~5.5 A° can separate a mixture of H_2 (~2.9 A°) and i-butane (~5 A°) at high temperatures (500 °C) when H_2 selectivity is enhanced substantially.[18]

Figure 6.1: Zeolite Membrane: Crystallization of a Thin Zeolite Layer on Ceramic Support

- **Composite membranes:** Inorganic-organic composite membranes that have been developed to date have been for low temperature applications. Research should focus on tunable synthesis, fabrication of low-cost membrane modules for high-selectivity applications, and development of composite materials that can withstand the chemical and physical environment required for distillation applications.

Inadequate intrinsic membrane properties (low permeability, low selectivity, low thermal and chemical resistance, etc.) are only one part of the problem that must be overcome before membranes will be used by industry. Just as important is module design and engineering analysis studies to increase the efficiency and reduce costs. Efforts are needed on new module configuration designs,

fouling control, and advanced control systems. A major obstacle is the high cost, particularly for high-volume applications. The cost for membranes scales linearly with size, whereas the cost per unit volume of most equipment decreases with size. Major cost reductions have been achieved in recent years for membrane systems by converting from plate and frame systems to spiral wound or hollow fiber modules. Additional advances in module design, such as learning to spin ceramic and metal membranes into fibers, will be required to produce membrane modules with high surface area at a price that is cost effective for competing with distillation.

Considering membranes' present high costs compared to distillation, they should initially be considered to replace the most costly distillation applications associated with difficult separations with low volatilities. Olefins, miscellaneous hydrocarbons, water-oxygenated hydrocarbons, and aromatic separations are potential applications.[19]

Hybrid Systems

Material development associated with hybrid distillation systems to replace traditional distillation should also be considered. Material research is needed to support design of new hybrid systems (such as field-enhanced distillation, reactive and extractive distillation, and membrane reactors). This includes both the development of the mass separating agents (sorbents, solvents, and membranes) and equipment designs to incorporate the separating agents into distillation equipment. Hybrid distillation systems are in limited use in the petrochemical industry, but they could have much wider applicability if improved mass separating agents were available that could withstand the harsh distillation environment.

It may be technically easier and more economical to replace distillation with hybrid systems than to totally replace distillation with an alternative technology. For example, most membrane processes today can not produce high-purity products required for distillation applications. However, it may be possible to make technical advances that will take advantage of their energy efficiency by using membranes as a polishing step following a traditional distillation step. Many of the material development needs for hybrid systems are similar to the alternative technologies described above.

Table 6.3:Potential Applications for Hybrid Technologies Involving Membranes and Distillation

System	Potential Savings 10^9 Btu/yr
Propane/propylene	13
Natural gas dehydration	12
Deasphalting of oil	10
Ethane/ethylene	6
Sour-water stripping	6
Inorganic acid dehydration	5
Acetic acid dehydration	3
Ammonia manufacture	2
MTBE manufacture	2
Urea manufacture	2

Source: Separation Technologies for the Industries of the Future, National Academy Press, Washington DC, 1998, pg 22

Pervaporation is the most widely known membrane-distillation hybrid system, particularly for ethanol-water separations.[20] This is an important separation process considering the predicted rapid growth of ethanol as a fuel additive (gasohol). The use of these membrane systems is presently limited by the thermal stability and low permeation of the membrane. Higher selectivity/flux membranes that can withstand aggressive organic mixtures at high temperatures (120°C to 250°C) would be required for distillation applications for hybrid membrane systems. Control of membrane swelling is critical to obtain the desired selectivity. Candidates for energy savings of 33% have been estimated in Table 6.3 for hybrid technologies involving membranes and distillation.

An example of an emerging technology resulting directly from the development of new solvent materials is extractive distillation with ionic liquid solvents. Extraction and extractive distillation employing ionic liquids as the separating agent are discussed in patent literature for separating close-boiling or azeotropic mixtures[21,22] and in multiple hydrocarbon separation processes.[23,24,25,26] Ionic liquids are, for the most part, in the discovery stage of research. Additional research into the design of ionic liquids, their long-term performance in an industrial environment, scale-up for commercial production, and incorporation into distillation equipment would be required before they could be implemented industrially.[27]

Distillation-adsorption hybrid processes involve making a rough separation with distillation followed by polishing with adsorption. The potential energy savings for such systems are high. However, they will require the development of new effective adsorbents, and reduction in costs by increasing bed loadings, reducing number of regenerations, and reducing energy required per regeneration. Development of improved adsorbents requires understanding the connection between properties of adsorbents and their performance. New adsorbents must be developed that will selectively adsorb components from close-boiling hydrocarbon mixtures for many applications. There is also a need to

be able to predict and control the temperature rise in a column as the mass transfer zone progresses through an adsorption bed. Adsorption has traditionally been used to separate materials present in relatively low concentrations. This means that the energy required for desorption can be limited to a relatively small amount. For these processes to be competitive for higher concentration applications, heat transfer will need to be addressed. Research in efficient and rapid removal of heat from the sorbing sections and delivery of heat to the desorbing sections of adsorption processes will reduce the costs of these processes and extend their use to bulk separations. Hybrid distillation-adsorption processes could be considered for hydrocarbon-water, oxygenated hydrocarbons-water, olefins, and aromatic separations.[28]

6.2 Alternatives to Evaporation

The energy consumed by steam-driven evaporation processes in the chemicals and forest products industries is of the order of 1,000 TBtu/yr. Examples of large-scale production processes where evaporation could potentially be replaced by alternative technologies include concentration of phosphoric acid in phosphoric acid production, and concentration of black liquor in pulp and paper production. If successful, the total estimated energy savings is over 100 TBtu/yr.

The most significant reductions in energy usage will come from developing new low-temperature processes to displace traditional evaporation—an effort in which materials development will play a major role. Technologies which could be considered for replacing evaporators include membranes, advanced filtration techniques, electrolysis, and crystallization.

Promising technologies with materials research needs include advanced filtration and membranes. In applications for alternatives to evaporation, new technologies must be designed that can withstand temperatures of up to 54°C to 79°C, humidity (steam), and highly corrosive environments. For application in the pulp and paper industry, black liquor would be concentrated from about 15% dissolved solids to about 75% dry solids. The feed stream contains alcohols, ketones, phenolics, organic acids, reduced sulfur compounds, etc.

Membranes

Similar to distillation, important properties for emerging membrane materials include durability, selectivity, resistance to fouling, impact strength, flexibility, thermal stability, and transport properties. In general, selectivity requirements will not be as high for evaporation applications as in distillation. However, resistance to fouling and self-cleaning are very important parameters for these applications.

As with distillation, implementation of hybrid systems such as combining membranes and evaporation may be more practical and economical than total replacement of evaporation. Other options include coupling electrolysis with evaporation to reduce the load on the evaporators (see Appendix C).

Advanced Filtration

Advanced filtration techniques, such as cross-flow filtration, could also be considered for these applications. Both improvements in the separating media and changes in equipment design are required to make the technology economically competitive. This could involve the coupling of filtration with other technologies, such as vibrating disks and ultrasonics.[29]

6.3 Improved Gas Separations

A large amount of research has been devoted to gas separations in recent years, and energy evaluations indicated that the potential energy savings from additional R&D in these areas will be limited, particularly when considering one-for-one replacement of existing separation technologies. However, high-risk research could be considered for hydrogen recovery in the petroleum refining industry, and for oxygen enrichment for oxygen-fueled furnaces (as opposed to traditional air-fueled furnaces) in chemical industries (methanol, lime, and sodium carbonate). The energy savings for these applications are estimated to be 3 TBtu and 5 TBtu per year, respectively. Oxygen enrichment to feed oxygen-fueled smelters is also a cross-cutting application for the mining industry.

Hydrogen Separation

Opportunities for energy savings beyond incremental improvements to distillation-based separations may be realized through the development of membranes for the separation of hydrogen and hydrocarbons in gas recovery unit operations. These operations could recover hydrogen from catalytic cracking and hydroforming processes. Currently, the hydrogen is flared or combusted to reduce emissions or heat unit operations. The most feasible membranes for these applications are microporous metal and ceramic membranes. The associated materials development needs include refinement of the fabrication process to reduce defects in large scale membranes, development of higher flux high temperature membranes, development of metal oxide membrane materials capable of operation at temperatures less than 600°C, and improved thermal mechanical performance.

A large amount of research, development and demonstration for high-temperature (>800°C) air separation is presently being funded by DOE's National Energy Technology Laboratory (NETL) for ceramic membranes with applications in fuel cells, hydrogen separations, and oxygen separations. Any project directed towards separations in manufacturing should be complementary and not duplicate on-going work by NETL. Work on hydrogen recovery by palladium membrane has been

researched and even commercialized over a period of about 50 years and does not show any economic advantages over alternative processes. Therefore, no further work on palladium mebranes development is recommended.

Oxygen Production

Significant energy savings could be realized across several industries if existing air-fueled furnaces could be economically replaced with oxygen-fueled furnaces. For this to occur, vastly more energy efficient O_2/N_2 separation will be required than is achievable with the existing technologies. Application of oxygen-fueled furnaces in the production of methanol, lime, sodium carbonate, and smelting in the mining industry is estimated to be over 5 TBtu/yr.

It is estimated that new technologies, such as membranes, would need to enrich the O_2 by reducing the mass of nitrogen by 50% for these applications. However, the savings associated with the reduced need for gas treatment would be out-weighed by a factor of about four in the estimated energy cost for enriching the O_2, based on predicted efficiencies of membranes presently under development (this is based on a 50% reduction in the current energy consumption in the O_2/N_2 industry). Therefore, totally new “out-of-the-box” ideas would be required to make oxygen enrichment for these applications cost effective.

Existing or developing separation processes include two advanced technologies that have been commercialized for many years, and are being continuously improved with respect to reducing investment and operating costs. The most common process is cryogenic distillation, which is most commonly carried out in a heat-integrated, double-column arrangement. This process can recover oxygen and nitrogen simultaneously. The second process is pressure-swing adsorption, which can recover only oxygen or nitrogen as relatively pure streams, but not both from the same process at the same time. Polymer-membrane-based processes are also used commercially for nitrogen production, but a widely used, economical process for oxygen production has not been forthcoming. Ceramic membranes are being developed by NETL for potential oxygen separation. Optimization and modeling work on incremental improvements to existing processes or from developing technologies simply will not suffice; only innovative ideas will help achieve these goals. In addition, careful attention must be paid in these projects as to how the process can be embedded into various oxygen-consuming processes, where applicable, to attain maximum energy-use reduction.

References

[1] DOE Industry Technology Program Industries of the Future Annual Report (http://www.eere.energy.gov/industry/cfm/fullArticle.cfm/id=801) and Industry Analysis Briefs (http://www.eia.doe.gov/emeu/mecs).

[2] Humphrey, Jimmy L., Keller, George E., II, *Separation Process Technology,* McGraw-Hill, 1997.

[3] Garner, J.W., Energy Conservation Practices Offer Environmental and Cost Benefits. Pulp & Paper, October 2002.

[4] Brown, Harry L., et. al., *Energy Analysis of 108 Industrial Processes*, Fairmount Press, May 1996.

[5] Humphrey, Jimmy, et. al., *Separation Technologies - Advances and Priorities*, DOE/ID/12920-1., U.S. Department of Energy, Office of Industrial Technologies, Feb 1991.

[6] Humphrey, Jimmy L., Keller, George E., II, *Separation Process Technology,* McGraw-Hill, 1997.

[7] Scouten, Charles, *Advanced Separations In the Oil-Gas-Petrochemical Industry*, Amoco, presentation to National Research Council, December 1997.

[8] Vision2020: 2000 Separations Roadmap, AIChE, 1999.

[9] Blytas, G.C., "Separation of Unsaturates by Complexing with Nonaqueous Solutions of Cuprous Salts," in Li, N.N., and Calo, J.M. (editors), Separation and Purification Technology, pp. 19-58, Marcel Dekker, Inc., New York, 1992.

[10] Keller, G.E., Marcinkowsky, A.E., Verma , S.K., and Williamson, K.D.,"Olefin Recovery and Purification via Silver Complexing," in Li, N.N., and Calo, J.M. (editors), Separation and Purification Technology, pp. 59-83, Marcel Dekker, Inc., New York, 1992.

[11] Accelerating Ionic Liquid Commercialization, prepared by BCS, Inc., April 2004.

[12] Leonard, R. A., "Recent Advances in Centrifugal Contactor Design," Separation Science and Technology, 23(12&13), 1473-1487 (1988).

[13] Leonard, R. A., et al, "Centrifugal Contactors for Laboratory-Scale Solvent Extraction Tests," Separation Science and Technology, 23(1-4), 193-210 (1997).

[14] CINC Corp. For literature, see www.cinc-co.com. 2003.

[15] Levenson, M., et al, Alternatives for High-Level Waste Salt Processing at the Savannah River Site, Board on Radioactive Waste Management and Board on Chemical Sciences and Technology, National Research Council, National Academy Press, Washington, DC, 2000.

[16] Levenson, M., et al, Research and Development on a Salt Processing Alternative for High-Level Waste at the Savannah River Site, Board on Radioactive Waste Management and Board on Chemical Sciences and Technology, National Research Council, National Academy Press, Washington, DC, 2001.

[17] Rousselet-Robatel Company. For literature, see www.rousselet-robatel.com. 2003.

[18] Caro J., Noack M., Kölsch P., and Schäfer R., "Zeolite Membranes – State of their Development and Perspective," Microporous Mesoporous Materials, 38 (2000) 3.

[19] Humphrey, J.L., Seibert, A.F. and Koort, R.A., *Separation Technologies – Advances and Priorities*, DE91-010 024, February 1991.

[20] *Separation Technologies for the Industries of the Future,* National Academy Press, Washington, DC, 1998, pg 22.

[21] DE10136614, Arlt, W., Seiler, M., Jork, C. and Sneider, T. (BASF Aktiengesellschaft, Germany) "Ionic liquids as selective additives for the separation of close-boiling or azeotropic mixtures" (WO2002074718).

[22] DE 10154052, Gmehling, J. and Krummen, M. "Use of ionic liquids as entraining agents and selective solvents for separation of aromatic hydrocarbons in aromatic petroleum streams".

[23] 20030125599, Boudreau, L.C., Driver, M.S., Munson, C.L. and Schinski, W.L. (ChevronTexaco). "Separation of dienes from olefins using ionic liquids and metal salt complexing agents" (WO2003059483).

[24] U.S. Patent 6,339,182, Munson et al. (Chevron) "Separation of olefins from paraffins using ionic liquid solutions".

[25] U. S. Patent 6,579,343, Brennecke, J.F. and Maginn, E.J. (Notre Dame) "Purification of gas with liquid ionic compounds".

[26] WO20030091489, Hommeltoft, S.I. "Process for the drying of a hydrocarbon stream".

[27] Accelerating Ionic Liquid Commercialization, Prepared by BCS, Inc., April 2004.

[28] J. S. Humphrey, *Separation Technologies – Advances and Priorities*, DE91-010 024, February 1991.

[29] Personal communication with Vincent Van Brunt, University of South Carolina.

Glossary

Anisotropic	Materials that have properties that differ according to the direction of the measurement. Ideally, in membrane systems, the pore structure should widen as the permeate traverses through the pores of the membrane, making anisotropy a desirable membrane material property.
Azeotropes	Liquid mixtures where vapor and liquid compositions are equal, and the components can not be separated by conventional distillation.
Beneficiation	Ore processing to concentrate the valuable metal in the ore by removing unwanted constituents and to regulate the size of the product. Typical beneficiation steps include crushing, washing, filtration, sorting, sizing, separation, concentration, and agglomeration.
Black Liquor	A paper mill's post-pulping product after cellulose is removed from the wood. This lignin- and hemicellulose-containing chemical is a residue after wood chips are cooked with caustic soda and sodium sulfate in a digester (kraft process). Black liquor is concentrated by evaporation and burned in the recovery boiler to recover the digesting chemicals and to generate steam and electric energy.
Boundary Layer Formation	The fluid dynamics at a membrane's surface create conditions in which the retained species becomes concentrated at the membrane surface (concentration polarization). The combination of membrane flux rate, bulk feed rate and feed path design (feed spacer) contribute to the degree of polarization which impacts both the flux rate and selectivity performance of the membrane.
Chiral Mixtures	Mixtures with components that are essentially chemically identical but differ in the spatial arrangement of chemical groups or atoms around a single atom so as to have different "handedness" or non-superimposable mirror images.
Compaction	Compression of the membrane structure due to a pressure difference across its thickness. Compaction typically results in a gradual decline in flux across the membrane.
Composite Membrane	Membrane having chemically or structurally distinct layers.

Cross-Flow Filtration	Flow through a membrane module in which the fluid on the upstream side of the membrane moves parallel to the membrane surface and the fluid on the downstream side of the membrane moves away from the membrane in the direction normal to the membrane surface.
Floatation	Uses difference in the densities and/or the affinities of different materials to a selected liquid. This process separates solvent-repelling particulates from solvent-attracting particulates by passing fine air bubbles up through a solid-liquid mixture. The fine bubbles attach to and lift or float the solvent-repelling particles up where they are collected.
Flux	Number of moles, volume, or mass of a specified component passing per unit time through a unit of membrane surface area normal to the thickness direction.
Fouling	Process resulting in loss of performance of a membrane due to the deposition of suspended or dissolved substances on its external surfaces, at its pore opening, or within its pores.
Hybrid Systems	A combination of two separation processes that work more efficiently together than either process by itself. Some examples of hybrid systems used commercially are: reverse osmosis/evaporation; distillation/adsorption; distillation/pervaporation; reverse osmosis/ distillation.
Ionic Liquids	Organic salts with melting points less than 100 degrees, often even lower than room temperature. As liquid salts, they offer excellent dissolution properties for most organic and inorganic compounds, high thermal stability and no measurable vapor pressure, making them excellent substitutes for traditional organic solvents
Membrane Module	A unit assembly containing a combination of membranes and the membrane containment vessel
Membrane Packing Density	Membrane surface per membrane module volume

Permeate Path	Once transported through the membrane, the permeate must travel to a point of collection. The path that the permeate takes must be designed to minimize pressure drop and be unaffected by the composition and temperature of the permeate. Material composition and structure of the permeate carrier contribute to the overall performance of the membrane module.
Relative Volatility	A key factor that determines the ease with which components are separated by distillation. It is defined as the ratio of vapor fraction of more volatile component / vapor fraction of less volatile component to the liquid fraction of more volatile component / liquid fraction of less volatile component. Its value must be > 1 for distillation to be an effective separation process.
Screening	Physical solid-liquid separation process where the slurry passes over a screen. The solids are collected on the screen while the liquids pass through. The separation efficiency of a screening process depends on the size and design of the screen. Screens can be stationary, rotating, or vibrating.
Selectivity	A property that measures the separating capability of a membrane for two or more species. It is defined as the ratio of fluxes of two species through a membrane when the driving forces are equal, with the higher flux rate as the numerator. Higher the selectivity, easier the separation.
Solution-diffusion	Molecular-scale process in which penetrant is sorbed into the upstream membrane face from the external phase, moves by molecular diffusion in the membrane to the downstream face and leaves into the external gas, vapor, or liquid phase in contact with the membrane.
Sorption	Absorption and adsorption
Zeolites	Microporous crystalline solids with well-defined structures. Generally, they contain silicon, aluminum and oxygen in their framework and cations, water and/or other molecules within their pores. With their unique properties, zeolites can separate molecules based on differences in size, shape and polarity.

Table A.1: A Breakdown of Total Energy Consumed by U.S. Industries (2001)

In Trillion Btu	Petroleum Fuels								Non-Petroleum Fuels									Feedstock							
	Residual Oil	Distillate Oil	LPG	Pet Coke	Still Gas	Motor Gas	Other Petroleum	Petroleum Sub-Total	Natural Gas	Lease & Plant Fuel	Metallurgical Coal	Coke	Steam Coal	Renewable	Purchased Electricity	Non Petro Sub-Total	In-Plant Total	LPG	Petro Chem	Natural gas	Other Petro	Feedstock Sub-Total	Grand Total	Electricity Losses	Grand Grand Total
Energy-Intensive Industries[¤]:																									
Chemicals [2]	39.5	2.0	38.8	319.9			287.2	687.4	1,640.6				232.1		459.1	2,331.8	3,019.2	1,674.7	1,368.7	599.4		3,642.8	6,662.0	1,038.2	7,700.2
Refining [8]	39.8	6.2	17.8	532.6	1,441.3		33.5	2,071.2	785.4				0.8		116.6	902.8	2,974.0					0.0	2,974.0	263.7	3,237.7
Forest Products [7]	174.7	11.1	6.3					192.1	580.1				293.7	1,329.4	260.3	2,463.5	2,655.6					0.0	2,655.6	588.6	3,244.2
Iron/Steel [4]	4.6	34.1					7.9	46.6	400.9		695.8	24.4	63.5		148.8	1,333.4	1,380.0					0.0	1,380.0	336.5	1,716.5
Mining (non O&G) [6]	52.5	202.5				15.3		270.3	163.2				76.5		243.0	482.7	753.0					0.0	753.0	549.5	1,302.5
Aluminum [1]	0.4			5.3				5.7	156.4				32.5		218.4	407.3	413.0					0.0	413.0	493.9	906.9
Metal Casting [5]		1.6	3.3				1.6	6.6	193.5				42.6		88.6	324.7	331.2					0.0	331.2	200.3	531.5
Glass [3]	2.5							2.5	144.1				10.2		40.2	194.5	197.0					0.0	197.0	90.9	287.9
Sub-Total	314.0	257.6	66.2	857.8	1,441.3	15.3	330.2	3,282.4	4,064.2	0.0	695.8	24.4	751.9	1,329.4	1,574.9	8,440.6	11,723.0	1,674.7	1,368.7	599.4	0.0	3,642.8	15,365.8	3,561.6	18,927.4
Mining (Oil & Gas) [9]	0.0	(4.2)				6.1	8.5	10.4	578.1	1,118.2			64.7	1.1	(28.0)	1,734.1	1,744.5					0.0	1,744.5	(63.3)	1,681.2
Cement [10]	2.1	1.0		31.6			21.1	55.8	23.3		7.6		219.1		37.9	287.9	343.7					0.0	343.7	85.7	429.4
Food Industry [11]	14.4	17.6	5.1					37.1	544.6				155.5	134.5	217.4	1,052.0	1,089.1					0.0	1,089.1	491.6	1,580.7
Agriculture [12]		469.3	109.6			93.9	21.7	694.5	226.2					25.5	172.9	424.6	1,119.1					0.0	1,119.1	391.0	1,510.1
Construction [13]		229.7				68.3	*	298.0	258.7						106.2	364.9	662.9				1,247.6	1,247.6	1,910.5	240.2	2,150.7
Durables [14]	5.3	25.7	13.9					44.9	641.1				55.9	44.3	661.2	1,402.5	1,447.4					0.0	1,447.4	1,495.2	2,942.6
Other [15]	22.6	55.7	25.4				(1.6)	102.1	916.6				140.9	74.3	732.5	1,864.3	1,966.4					0.0	1,966.4	1,656.4	3,622.8
TOTALS [16]	358	1,052	220	889	1,441	184	380	4,525	7,253	1,118	703	24	1,388	1,609	3,475	15,571	20,096	1,675	1,369	599	1,248	4,890	24,986	7,858	32,845
INDUSTRIAL USA [17]	150	1,210	2,100	-	-	160	3,110	7,880	7,560	1,120	710	20	1,510	1,640	3,290	16,020	23,900	-	1,160	-	1,248	2,408	26,308	7,440	32,330

Notes

¤ Energy-intensive industries are those industries in which the Industrial Technology Program currently focuses their R&D efforts

1 Annual Energy Outlook 2004 Supplemental Tables: Table 31, page 41

2 Annual Energy Outlook 2004 Supplemental Tables: Table 27 page 25

3 Annual Energy Outlook 2004 Supplemental Tables: Table 28 page 30

4 Annual Energy Outlook 2004 Supplemental Tables: Table 30 page 36

5 Metal Casting IOF values based on MEC 1998 fuel consumption adjusted for 1998 tons shipped (14,669,407) to 2001 tons (12,170,400) these values are then subtracted from the Industrial "Other" catagory

6 Mining IOF E&E Profile 2002 estimates - These values do not include Oil and Gas extraction

7 Forest products was obtained by adding Paper from Annual Energy Outlook 2004 Supplemental Tables: Table 26 page 22 to Wood Products which are estimed to be (504/2744) of the Paper value based on 1998 MECS data

8 Annual Energy Outlook 2004 Supplemental Tables: Table 24 page 14 - Note: Some studies include the feedstock energy associated with non-transportation products (e.g., road tar, asphalt, ...) in the overall energy footprint of the refining industry. In this report these values are included under the Construction catagory.

9 Annual Energy Outlook 2004 Supplemental Tables: Table 32, page 44 minus values IOF Mining values Note 6

10 Annual Energy Outlook 2004 Supplemental Tables: Table 29 page 33

11 Annual Energy Outlook 2004 Supplemental Tables: Table 25 page 19

12 Annual Energy Outlook 2004 Supplemental Tables: Table 32, page 44

13 Annual Energy Outlook 2004 Supplemental Tables: Table 32, page 44 - Other Petroleum * which represents road tar, asphalt, etc.. has been moved to the feedstock energy consumption column.

14 Annual Energy Outlook 2004 Supplemental Tables: Table 32, page 44

15 Annual Energy Outlook 2004 Supplemental Tables: Table 32 page 44 minus the Metal Casting IOF values (see Note 6) minus the Wood Products portion of Forest products (see Note 7)

16 **Total for all Industries**

17 Annual Energy Outlook 2004 Supplemental Tables: Table 10, page 64 - Other Petroleum * and chemical feedstocks have been subtracted from Petroleum subtotal and place in Feedstock Category

Data values shown in brown are calculated values

CONCLUSIONS:

57.6% is the energy-intensive industries portion of the total industrial energy consumption

38.1% of energy-intensive industries energy consumption is related to electricity losses and feedstock energy

18.8% of energy-intensive industries energy consumption is related to electricity losses

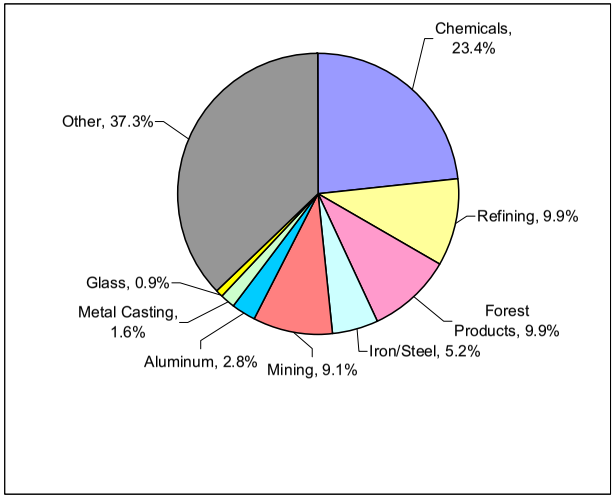

Table A.2: Energy-Intensive Industries' Separation Energy and Total Energy Consumption

	In-plant			In-plant Separations		Feedstock Energy		Electric Losses		Total Energy Consumption		
	TBtu/Yr	Energy-Intensive Industries percent	Industry percent	TBtu/Yr	Energy-Intensive Industries percent	TBtu/Yr	Energy-Intensive Industries percent	TBtu/Yr	Energy-Intensive Industries percent	TBtu/Yr	Energy-Intensive Industries percent	Industry percent
Energy-Intensive Industries *												
Chemicals	3,019.2	25.8%	15.0%	1,208	26.9%	3642.8	100.0%	1,038.2	29.2%	7,700	40.7%	23.4%
Refining	2,974.0	25.4%	14.8%	1,460	32.5%	0	0.0%	263.7	7.4%	3,238	17.1%	9.9%
Forest Products	2,655.6	22.7%	13.2%	1,753	39.0%	0	0.0%	588.6	16.5%	3,244	17.1%	9.9%
Iron/Steel	1,380.0	11.8%	6.9%		0.0%	0	0.0%	336.5	9.4%	1,716	9.1%	5.2%
Mining (non O&G)	753.0	6.4%	3.7%	60	1.3%	0	0.0%	549.5	15.4%	1,303	6.9%	4.0%
Aluminum	413.0	3.5%	2.1%	17	0.4%	0	0.0%	493.9	13.9%	907	4.8%	2.8%
Metal Casting	331.2	2.8%	1.6%		0.0%	0	0.0%	200.3	5.6%	532	2.8%	1.6%
Glass	197.0	1.7%	1.0%		0.0%	0	0.0%	90.9	2.6%	288	1.5%	0.9%
Sub-Total	11,723	100.0%	58.3%	4,497	100.0%	3642.8	100.0%	3,561.6	100.0%	18,927	100.0%	57.6%
Other Industrial	8,373		41.7%			0		4,297		13,917		42.4%
TOTAL	20,096		100.0%			3,643		7,858		32,845		100.0%

* Energy-intensive industries are those industries in which the Industrial Technology Program currently focuses their R&D efforts
Data values shown in brown are calculated values

38% Separations percent of Energy-Intensive Industries
22% Separations percent of all Industries

Table A.3: Separation Energy Distribution for Energy-Intensive Industries

	Inplant Energy (Trillion Btu/yr)	Mass Transfer Separations (Trillion Btu/yr)	Physical Separations (Trillion Btu/yr)	
Chemicals	3,019			
		906		Distillation Operations [1]
		302		Extraction, Sorbents, etc… [1]
Refining	2,974			
		54		Gas Atmospheric Still Recovery
		710		Atmospheric and Vacuum Distillations [2]
		695		Cracking, Reforming, LubeOil, Asphalt and Vis [2]
Forest Products	2,656			
			*	Dewatering [2]
		797		Black Liquor Concentration [2]
		956		Paper Drying [2]
Iron/Steel	1,380			
Mining (non O&G)	753			
				Ore Extraction [3]
				Benefication [3] - Floatation and Screening are the largest enegy consuming operations.
			60	There are also mineral solid/liquid extractions.
				Materials Handling [3]
Aluminum	413			
			*	Bauxite Mining
				Alumina Refining - This process involves digestion, clarification, percipitation and calcination. The first three operations can be classified as mass transfer separations. Calcination is a chemical reaction process. The energy required for refining is 3.76 kWh (12,800 Btu) /kg of alumina and approximately 3,985,000 metric tons are refined in the
		17		
			*	Hall Heroult Reduction
			*	Secondary Aluminum Production
			*	Aluminum Forming
Metal Casting	331		*	Mold shake-out and sand recycling
			*	Scrap sorting
Glass	197		*	recycled glass color separation
TOTAL	**11,723**	**4,437**	**60**	
Percent of In-Plant Energy		38%	1%	

* less than 1 TBtu/yr

1 Humphrey, Jimmy L., Keller, George E., II, Separation Process Technology, McGraw-Hill, 1997

2 Brown, Harry L., et. al., Energy Analysis of 108 Industrial Processes, Fairmont Press, May 1996.

3 Mining IOF Energy and Environmental Profile 2000

Appendix B: Energy Consumption Evaluation Process and Calculations

An estimate of annual energy consumption was made for twelve major manufacturing processes used in the U.S. chemicals, crude oil refining, and forest products industries, and opportunities for energy savings through implementation of advanced separations technologies were evaluated using the methodology described below. The chemical process flow sheets which were evaluated for energy savings opportunities include ammonia, caustic soda/chlorine, phenol/cumene, ethylene, lime, oxygen/nitrogen, phosphoric acid, soda ash, and styrene/ethylbenzene. The integrated kraft pulp/ paper mill was selected as a representative of the bulk of the paper/paperboard processes, and an integrated oil refinery was evaluated for the petroleum industry. Summary of the evaluation process and results are provided in Tables A.1 and A.2 (Appendix A) and discussed below.

B.1 Evaluation Process

To calculate energy consumption breakdown in each of these major industrial processes their flow sheets were analyzed for energy inputs, energy outputs, and endothermic/exothermic reaction information. The mass flow information and energy data for existing processes were primarily obtained from a single source, *Energy Analysis of 108 Industrial Processes*.[1] This reference provides a common basis across multiple industries for energy analyses and the flow sheets shown in Figures B.1 to B.12. The data from this reference were supported and updated with additional information about current process flow sheets from a variety of sources.[2,3,4,5,6,7,8,9,10,11,12]

Each unit operation was reviewed to ensure that a first-law balance was achieved. The overall process flow sheet was reviewed to verify balances were complete for the steam-condensate system and for the overall (input-output) energy balance. In some cases corrections were made to the data to close energy balances. In a few cases, the corrections were relatively simple accounting errors but in other cases, additional energy losses were not fully captured in the energy values for the industry. These were primarily in the steam/condensate system and were attributed to energy losses in the plant piping.

The "total energy required" was defined as the gross energy supplied to all of the unit operations for a given process. This included both the energy supplied across the plant energy boundary (the net energy input) and the energy supplied by the steam, etc. produced within the plant. The difference between the total energy required and the net energy input represented the amount of energy recovery within the flowsheet.

Energy use can be defined either in terms of where energy is added to the system from outside the plant energy boundary or where energy leaves the plant energy boundary. The latter was selected as it is more closely associated with the efficiency of specific process steps. The energy consumption

included the low grade energy losses due to cooling water, losses to the environment, losses to the stack, energy contained in the product leaving the plant, energy in the waste water, etc. The analysis did not include the energy contained in internal process streams (i.e., streams passing from one unit operation to the next), since these internal streams do not cross the plant energy boundary.

Further all process steps were categorized as either reaction step, separation step, or energy conversion step:

- **Reaction steps** were those where the primary function of the unit operation was to conduct a chemical reaction. Typically these have one or more process streams entering and only one process stream leaving.
- **Separation steps** involved typically only one input process stream and multiple process streams leaving.
- **Energy conversion** operations are those such as the steam boiler, chiller, or electric generator that convert one type of energy to another which in turn is typically utilized by multiple process steps.

All unit operations such as heating and cooling that only have one process input and one process output were assigned to either the reaction or separation category as these were viewed as necessary parts of that operation.

The energy consumption for each process category was then calculated as a percent of the total in-plant energy consumption. At this point, the contribution of each process step was examined. The energy associated with the heat of reaction was separated from the energy required for the reaction unit operations. Since the overall heat of reaction cannot be altered, this allowed the study to focus on those portions that could benefit from improved process technology. However it is of value to know the energy requirements associated with the heat of reaction in order to better understand the fraction of the energy consumed by the process that cannot be directly affected by improved energy efficiency.

Using the ethylene production process as an example, the total (gross) energy required to produce one pound of ethylene is 15,738 Btu. Of this total 5,673 Btu of steam is consumed (and produced) in the process. The energy supplied (net) from outside the process is 10,065 Btu (see Table B.1). When broken down by process steps (and including the reaction endotherm as consumption), the percentages based on the net energy input shown in Table B.2 were obtained. In this example 22% of the energy input to the process is directly associated with the heat of reaction. The reaction operations consume another 27%, and the separation and energy conversion steps consume 23% and 29%, respectively.

Table B.1: Process Energy Requirements for Ethylene Production

Energy	Btu/lb
Net energy input to process (fuel)	10,065
Steam produced / consumed in process	5,673
Total (gross) energy requirements	15,738

Table B.2: Energy Utilization by Process Operation for Ethylene Production

Operation	Btu/lb	% of net energy input
Reaction operations	2721.4	27.0%
Reaction endotherm	2179.7	21.7%
Separation operations	2269.7	22.6%
Energy conversion	2929.9	29.1%
Other energy losses/gains	-37.7	-0.4%
Total	10065	100%

When tabulating the energy associated with the heat of reaction the convention of showing endothermic reactions as positive and exothermic reactions as negative was used. This convention leads to the potential to have energy consumption percentages greater than 100% for the other categories such as separations, as is the case for the Kraft pulp process which simply indicates that these unit operations consume not only the energy input (in the form of fuel and electricity) but also the energy released by the exothermic reactions.

"Other" energy losses are primarily associated with what can best be described as unaccounted losses in *Energy Analysis of 108 Industrial Processes*. They may be traced to energy losses in piping, steam traps, etc. and arise from the differences between the aggregate steam and condensate produced in the various unit steps and the aggregate steam and condensate that is fed into the various unit steps. While each discrete unit operation balances this, additional term was required to ensure that the disposition of the energy input to the systems was properly accounted for.

B.2 Evaluation Results

The separation processes involved in petroleum refining and organic chemicals industry primarily involve separation of volatile organic components. Distillation is used as the primary separation operation, and in virtually all these cases, the heat of vaporization is provided by steam heated reboilers. Conversely, the separation technologies involved in inorganic chemical industries cover a broad spectrum including solids screening, absorption, settling, evaporation, distillation, and filtration. Energy consumption in the separation processes ranges from about 1% of the total energy supplied to the process to 100% of the energy.

Process flowsheets and energy calculations for each of the industries examined in this report are presented below.

Petroleum Refining (see Figure B.1 for process flowsheet)

Petroleum refining is one of the most energy-intensive manufacturing industries in the United States.[13] It is also by far the most complex of the industrial operations evaluated involving numerous complicated reaction and separation operations. The separation operations account for over 30% of the total energy consumed in the process. They are based on either atmospheric or vacuum distillation. Reaction operations consume over 20% of the energy. Many of these "reaction" steps (e.g. hydrotreating) actually perform both a reaction and separation operation. The reaction is required to alter the chemical structure contained within the crude oil to permit subsequent separation to reduce sulfur, nitrogen, metal, and the other contaminants. While multiple pieces of process equipment may be required to conduct a particular reaction/separation operation in the flow sheet, the reference energy data for these two functions were combined into a single operation. No attempt was made to allocate and divide the energy use to reaction and separation operations.

Petroleum refining is a mature industry, and in general, there appears to be few opportunities for major energy savings arising from the introduction of alternate separation technology within the current process. Improved distillation column/tray design will provide incremental improvement of at least a few percent. While on the surface this may not appear to be significant it must be noted that each percent saving in net energy use amounts to savings of 20 trillion Btu/yr (TBtu/yr). Within a specific operation energy savings as high as 30% were reported when distillation trays were replaced with high-efficiency packing.[14,15] However the highly corrosive environment poses serious material related barriers to improving separation operations. The minimization of fouling of the primary heat exchangers is an additional material related issue that warrants further research.

Opportunities for substantial energy savings by improving distillation based separation may be realized by developing membranes or absorbents for the separation of hydrocarbons. One application of this will be in the gas recovery unit operation. A 20% energy savings in this operation will result in savings of nearly 10 TBtu/yr. Although the energy consumed in the unit operations for the recovery and recycle of H_2 is not available in *Energy Analysis of 108 Industrial Processes,* membrane developers estimate that the application of membranes for H_2 recovery from the numerous gas streams that are currently flared could save at least an additional 3 TBtu/yr.

Figure B.1: Petroleum Refining:

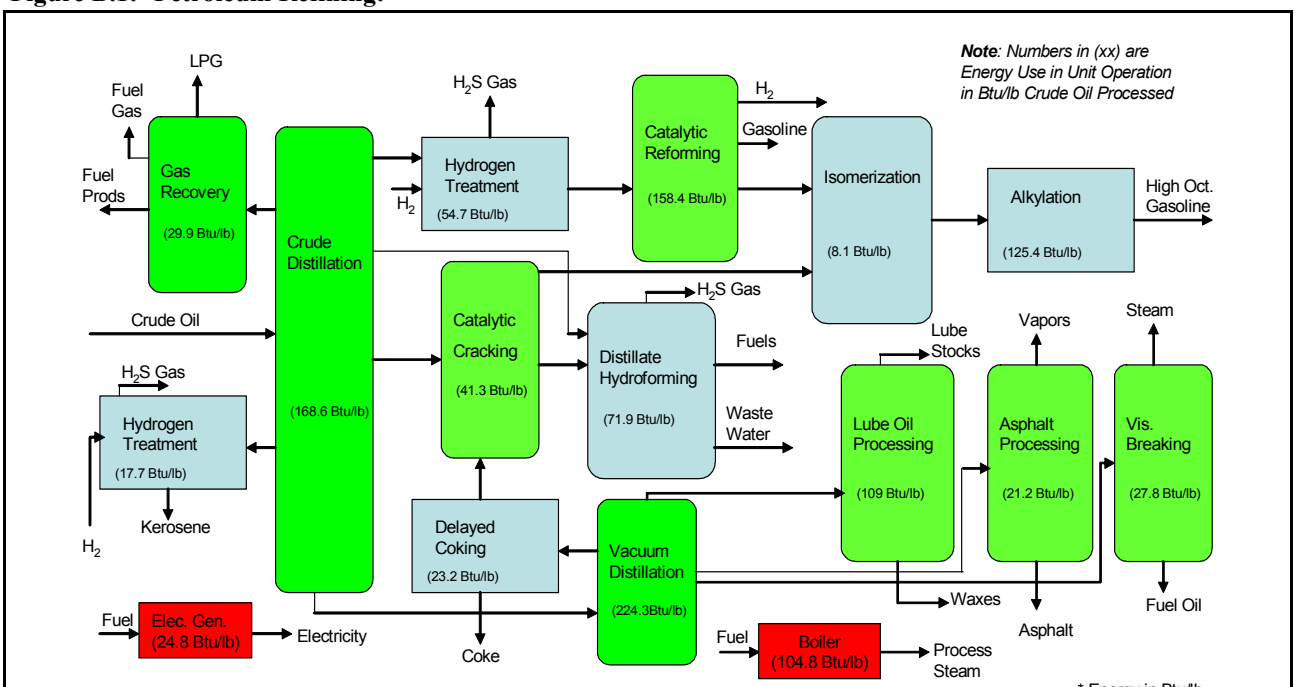

Chemical	Annual Production (lbs/yr)	Total Energy Required	Process Energy Input	Reaction Operations	dHrxn	Separation Operations	Energy Conversion	Separation Energy (Btu/yr)	Alternative Technology (Savings)	Potential Savings (Btu/yr)
Crude Oil	1.55E+12	1644.6*	1347.4*	283.3*	20.5*	807.4*	129.6*	1.25E+15	Membrane and absorbents for gas (hydrogen) recovery	9.28E+12
% of Input				21.0%	1.5%	59.9%	9.6%			

Ethylene (see Figure B.2 for process flowsheet)

The analysis of the ethylene production process is quite interesting from several aspects and can serve as an excellent example of interaction between several unit operations. The primary separation technology used in ethylene production is cryogenic distillation. The separation operation consumes only 22% of the total energy input to the system. Of this energy amount, virtually all is consumed in running the compressor that provides refrigeration for the cooler and the cryogenic distillation column. About 27% of the total input energy is consumed in reaction operations and another 22% in the heat of reaction. The remaining 29% is consumed in the conversion of energy to other forms. This conversion involves first the production of steam which is used to provide heat to several of the process steps but a major fraction is consumed in the generation of mechanical work which in turn is used to provide refrigeration for the condenser and the cryogenic distillation column. The use of membranes for CH_4 separation and the application of liquid extraction, membrane, or adsorbers to reduce or eliminate the cryogenic distillation operation is estimated to have the potential to save 56 TBtu/yr. These savings are estimated assuming a 50% reduction in the energy consumption in the "flash" operation for CH_4 separation; a 40% reduction in the ethane separation and in the energy consumed by the chiller; and a 20% reduction in the prime mover energy consumption to convert steam to mechanical work to drive the chiller. It is worth noting that the energy savings arise primarily in the energy conversion operations required for separation rather than in the "separation" process itself.

Figure B.2: Ethylene Production:

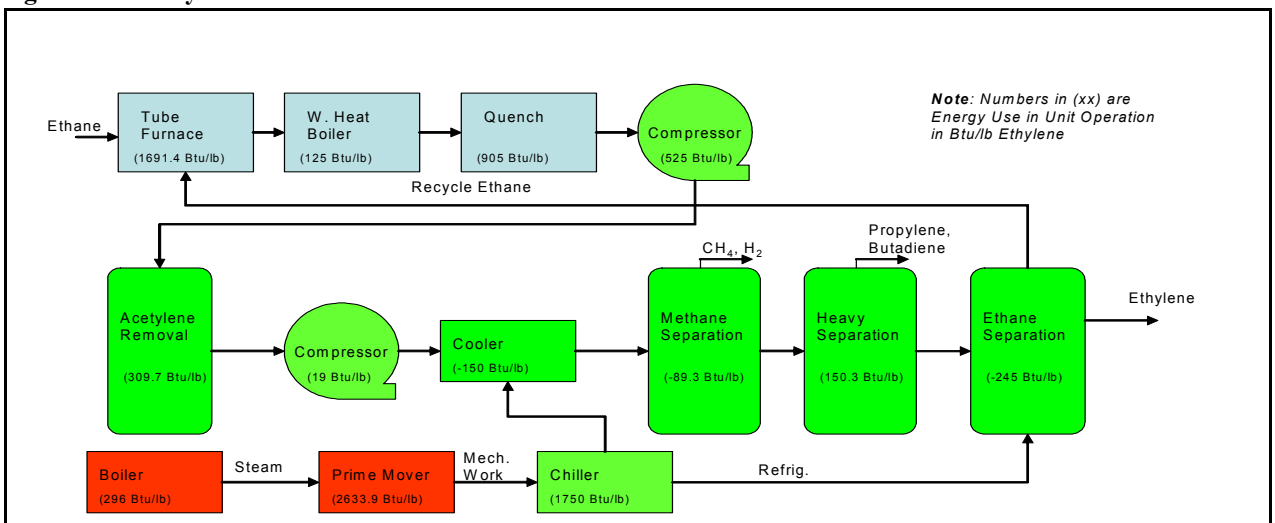

* Energy in Btu/lb

Chemical	Annual Production (lbs/yr)	Total Energy Required	Process Energy Input	Reaction Operations	dHrxn	Separation Operations	Energy Conversion	Separation Energy (Btu/yr)	Alternative Technology (Savings)	Potential Savings (Btu/yr)
Ethylene	5.21E+10	15738*	10065*	2721.4*	2179.7*	2269.7*	2929.9*	1.18E+14	Membrane, extraction, or adsorbents (40-50% reduction in Cryogenic Distillation Energy, 40% reduction in Chiller duty and 20% reduction in Prime Mover)	5.65E+13
% of Input				27%	21.7%	22.6%	29.1%			

Methanol (see Figure B.3 for process flowsheet)

In the production of methanol two-thirds of the separation energy is used by the final distillation to remove water from the methanol. It is estimated that liquid/liquid extraction or a hybrid pervaporation process could reduce this energy consumption by 25% saving 2 TBtu/yr. The other major energy consumer is the reformer furnace. O_2 enrichment of the air fed to the furnace will reduce the mass of nitrogen heated and released to the stack. It was estimated that the use of membranes to enrich the O_2 by reducing the mass of nitrogen could save up to 1TBtu/yr. However this saving is currently outweighed by about a factor of four because of the estimated energy cost of enriching the O_2 based on the current O_2/N_2 industry (this is based on a 50% reduction in the current energy consumption in the O_2/N_2 industry). A much more energy-efficient O_2/N_2 separation could reduce the energy consumption in all the industries that use large furnaces.

Figure B.3: Methanol Production:

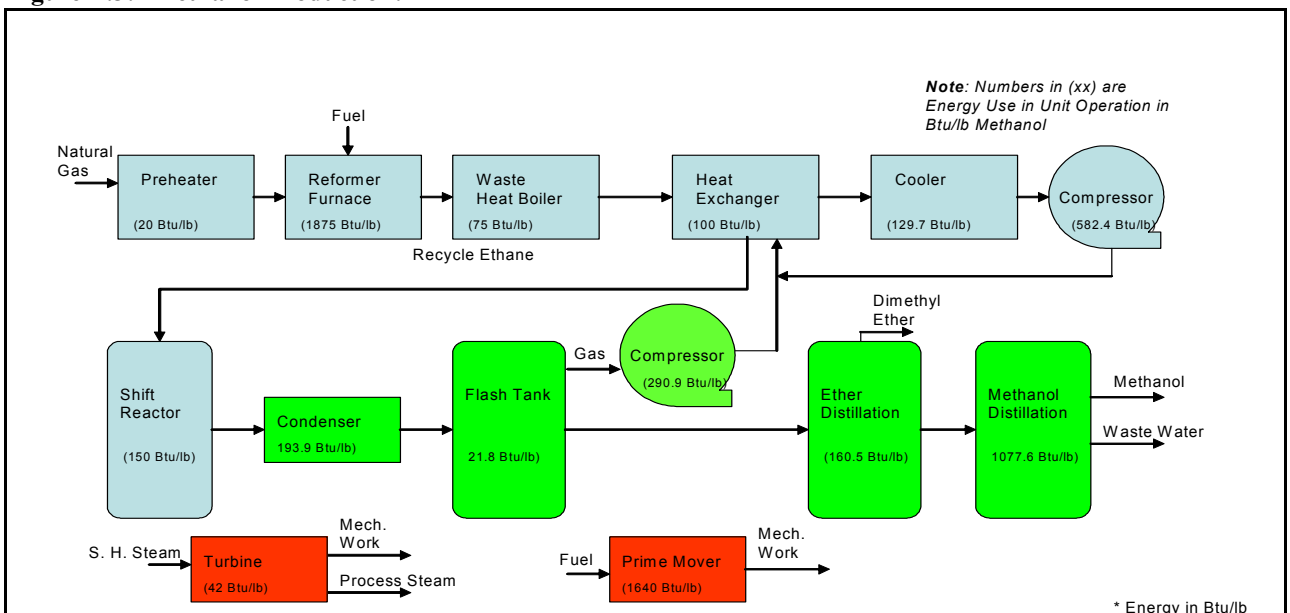

* Energy in Btu/lb

Chemical	Annual Production (lbs/yr)	Total Energy Required	Process Energy Input	Reaction Operations	dHrxn	Separation Operations	Energy Conversion	Separation Energy (Btu/yr)	Alternative Technology (Savings)	Potential Savings (Btu/yr)
Methanol	7.25E+09	14217*	7475*	2932.1*	1152*	1744.7*	1682*	1.26E+13	Pervaporation, extraction (25% Reduction in Methanol Distillation Energy)	1.95E+12
% of Input				39.2%	15.4%	23.3%	22.5%			

Styrene/Ethylbenzene (see Figure B.4 for process flowsheet)

Like crude oil refining, styrene/ethylbenzene production contains numerous distillation operations. Nearly 60% of the total energy input is consumed in reaction operations and 20% in separation operations. Distillation accounts for more than 90% of the energy utilized in the separation process. Liquid/liquid extraction utilizing high selectivity extractants could potentially be developed for use in place of the benzene and ethylbenzene recycle columns. Membrane separation technology could also potentially be used in the final purification step for styrene. It is estimated that a potential saving of 30% could be achieved in each of these operations resulting in a net saving of about 11 TBtu/yr.

Figure B.4: Styrene/Ethylbenzene Production:

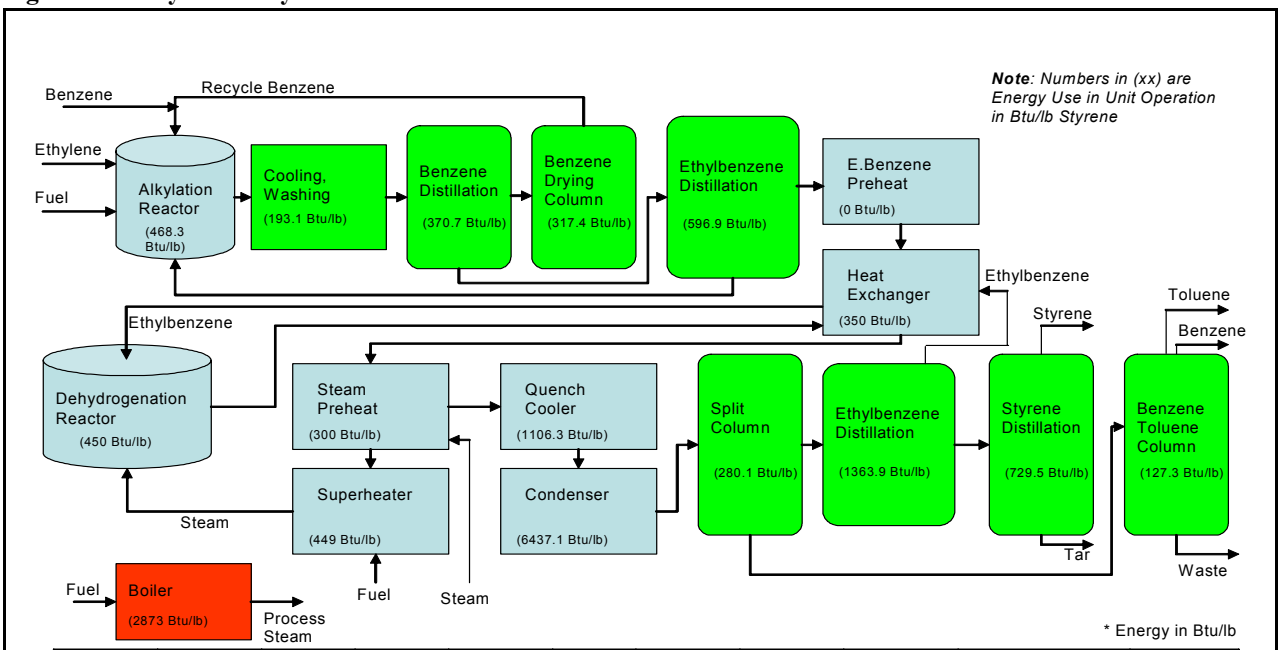

Chemical	Annual Production (lbs/yr)	Total Energy Required	Process Energy Input	Reaction Operations	dHrxn	Separation Operations	Energy Conversion	Separation Energy (Btu/yr)	Alternative Technology (Savings)	Potential Savings (Btu/yr)
Styrene	1.10E+10	45900.2*	16640*	9560.7*	-67*	3978.9*	2873*	4.36E+13	Membrane, Extraction (30% Reduction in Distillation Energy)	1.11E+13
% of Input				57.5%	-0.4%	23.9%	17.3%			

Phenol/Cumene (see Figure B.5 for process flowsheet)

Phenol/cumene is produced commercially by two processes. The UOP gas phase reaction process is the dominant manufacturing process in the industry and is the basis for this analysis.[16] The second commercial process utilizes a lower temperature liquid phase reaction and has somewhat lower energy requirements. The separation operations associated with phenol/cumene production via the UOP process are almost exclusively distillation and consume over 60% of the energy fed to the plant. The application of membranes, new extractants, and/or sorbents could significantly reduce the energy consumed in the repeated vaporization of the components as required by distillation. An estimated energy savings of 30% in each of the four largest distillation operations would result in savings of nearly 8.5 TBtu/yr. This is a conservative estimate and does not include potential associated reduction in the energy consumed in the boiler to produce steam utilized in the distillation columns (which constitutes ~30% of the total energy input).

Figure B.5: Phenol/Cumene Production:

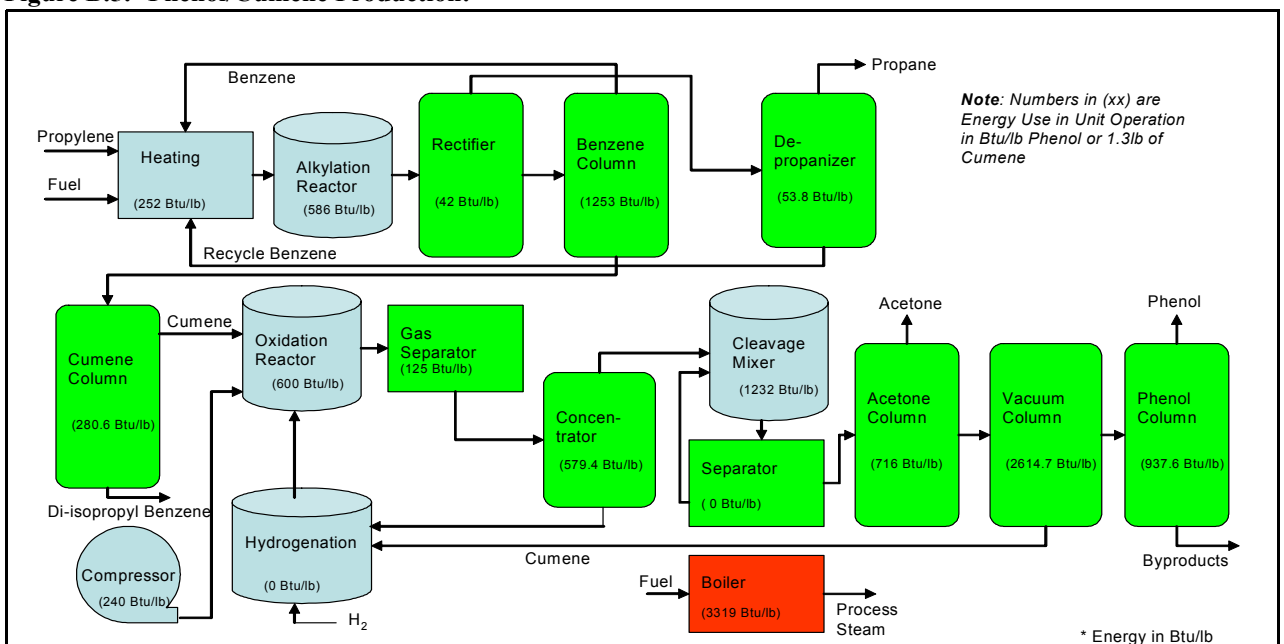

Chemical	Annual Production (lbs/yr)	Total Energy Required	Process Energy Input	Reaction Operations	dHrxn	Separation Operations	Energy Conversion	Separation Energy (Btu/yr)	Alternative Technology (Savings)	Potential Savings (Btu/yr)
Phenol	5.09E+09	20185*	10694*	2910*	-2143*	6608.1*	3319*	3.36E+13	Membrane, Extraction, Absorption (30% Reduction in Distillation Energy)	8.43E+12
% of Input				27.2%	-20.0%	61.8%	31.0%			

Ammonia (see Figure B.6 for process flowsheet)

Natural gas is the most economical feedstock in ammonia production via steam reforming (Ullmann, 2003). The conventional steam reforming process for ammonia production involves a single separation operation, i.e. the removal of CO_2 produced from the use of natural gas feed to the reformer as a source of hydrogen. This single step consumes 25% of the total energy input to the process. Currently CO_2 removal is accomplished using aqueous amine solutions (Mono Ethanolamine, Activated Methyl DiEthanolamine) or physical solvents like glycol dimethylethers (Selexol).[17] New, more easily regenerable sorbents, membranes, or ionic liquids could potentially save 30% of the separation energy or 15 TBtu/yr. Following the bulk CO_2 removal, the final traces of CO and CO_2 are then catalytically reacted with H_2 to form CH_4 to avoid poisoning the ammonia synthesis catalyst. Opportunities for significant improvement include:

1. Development of a highly efficient means to produce H_2 as a feed to the process
2. Development of an ammonia synthesis catalyst that would be resistant to poisoning by CO_2, thus eliminating the CO_2 removal unit and methanation operations entirely. The elimination of the CO_2 removal and methanation units could save 63 TBtu/yr.

Figure B.6: Ammonia Production:

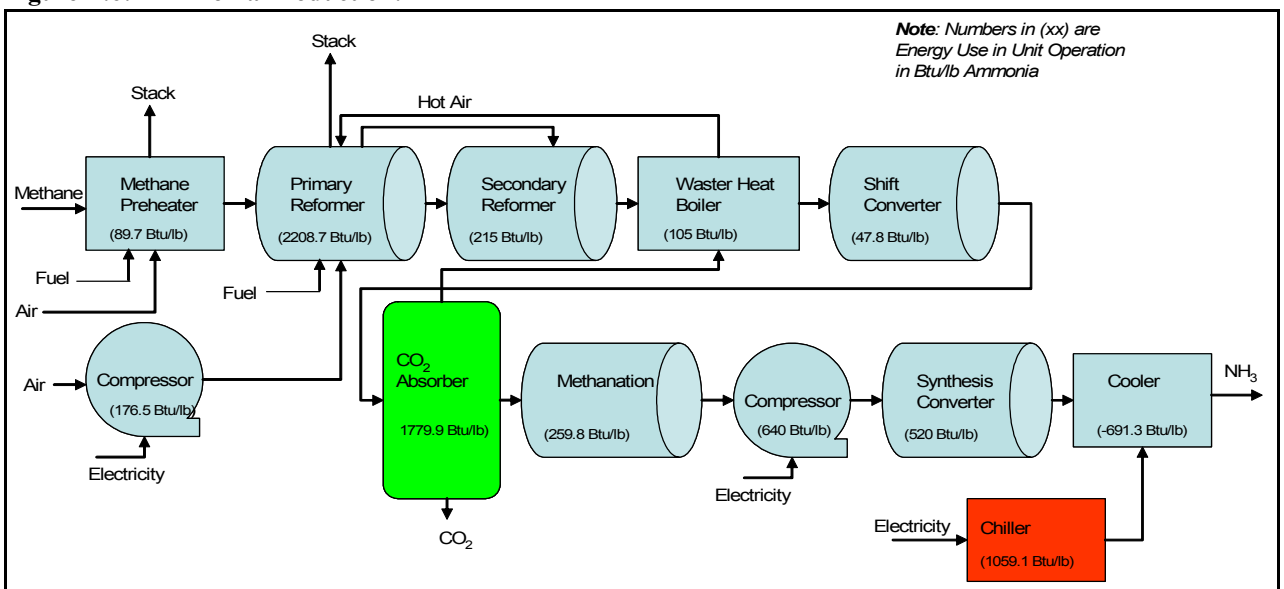

* Energy in Btu/lb

Chemical	Annual Production (lbs/yr)	Total Energy Required	Process Energy Input	Reaction Operations	dHrxn	Separation Operations	Energy Conversion	Separation Energy (Btu/yr)	Alternative Technology (Savings)	Potential Savings (Btu/yr)
Ammonia	2.90E+10	8842*	6445*	3571*	-851*	1779.9*	1059.1*	5.17E+13	Membranes, Extraction, Adsorption	1.55E+13
% of Input				55.4%	-13.2%	27.6%	13.7%			

Caustic Soda/Chlorine (see Figure B.7 for process flowsheet)

Caustic soda production contains numerous separation operations including electrolysis, evaporation, and settling. In total these operations comprise over 40% of the energy input to the plant. The production of steam and electricity account for another 35% and the heat of reaction consumes nearly 18%. In the separation operations the multiple-effect evaporator associated with the re-crystallization and recycling of NaCl consumes over 18% of the energy feed to the plant and the final evaporator consumes 6%. The final evaporation step may lend itself to the application of membranes or crystallization to pre-concentrate the NaOH solution prior to final vaporization resulting in potential savings of the order of 4 TBtu/yr.

Figure B.7: Caustic Soda/Chlorine Production:

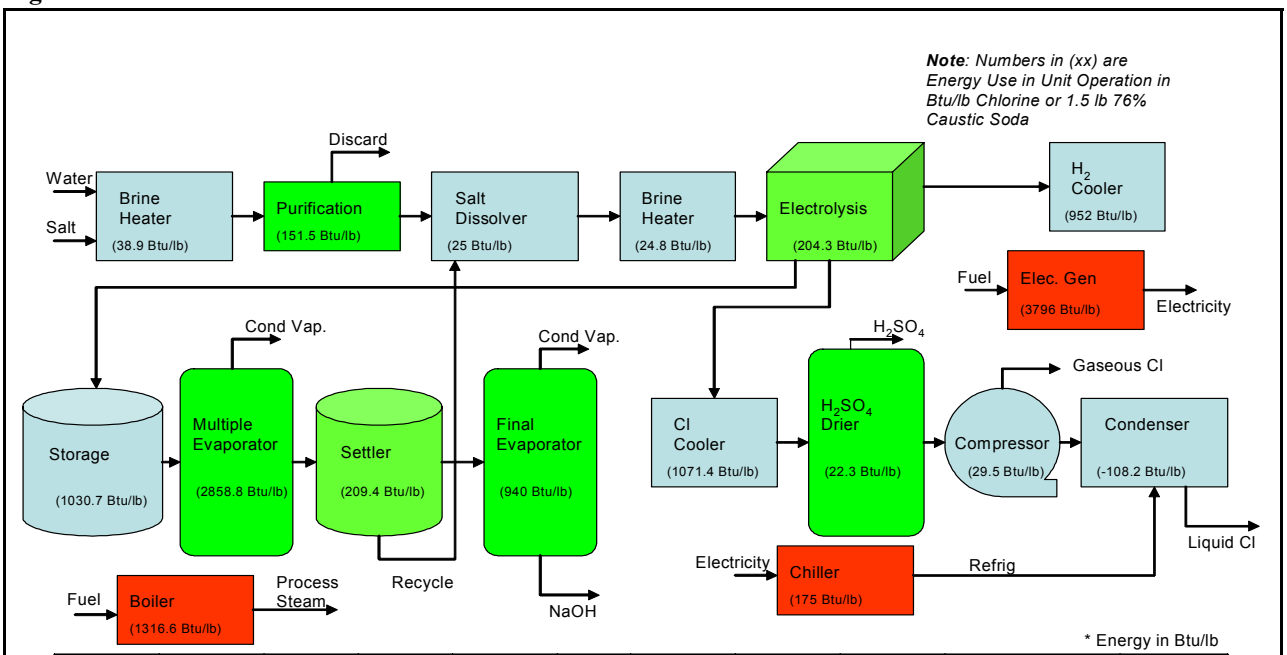

* Energy in Btu/lb

Chemical	Annual Production (lbs/yr)	Total Energy Required	Process Energy Input	Reaction Operations	dHrxn	Separation Operations	Energy Conversion	Separation Energy (Btu/yr)	Alternative Technology (Savings)	Potential Savings (Btu/yr)
Chlorine	2.51E+10	27046.6*	15438*	1040.7*	2700*	6409.7*	5287.6*	1.61E+14	Crystallization, membranes (15% Reduction in Final Evaporation Energy)	3.53E+12
% of Input				6.7%	17.5%	41.5%	34.3%			

Phosphoric Acid (see Figure B.8 for process flowsheet)

More than 60% of the total energy input to the phosphoric acid production using the dihydrate process is consumed in the grinding of the phosphate containing rock. Just over 30% of the energy is utilized in separation. This is split roughly one-third to filter operations to remove the insoluble gypsum and two-thirds to concentrate the phosphoric acid by steam-driven water evaporation. Roughly five tons of gypsum is generated for each ton of the acid produced.[18] Improved filter material and the development of membrane, extraction, and/or crystallization process for pre-concentration water removal could save ~20% of energy consumed in the filtration and evaporation operations or 6 TBtu/yr.

Figure B.8: Phosphoric Acid Production:

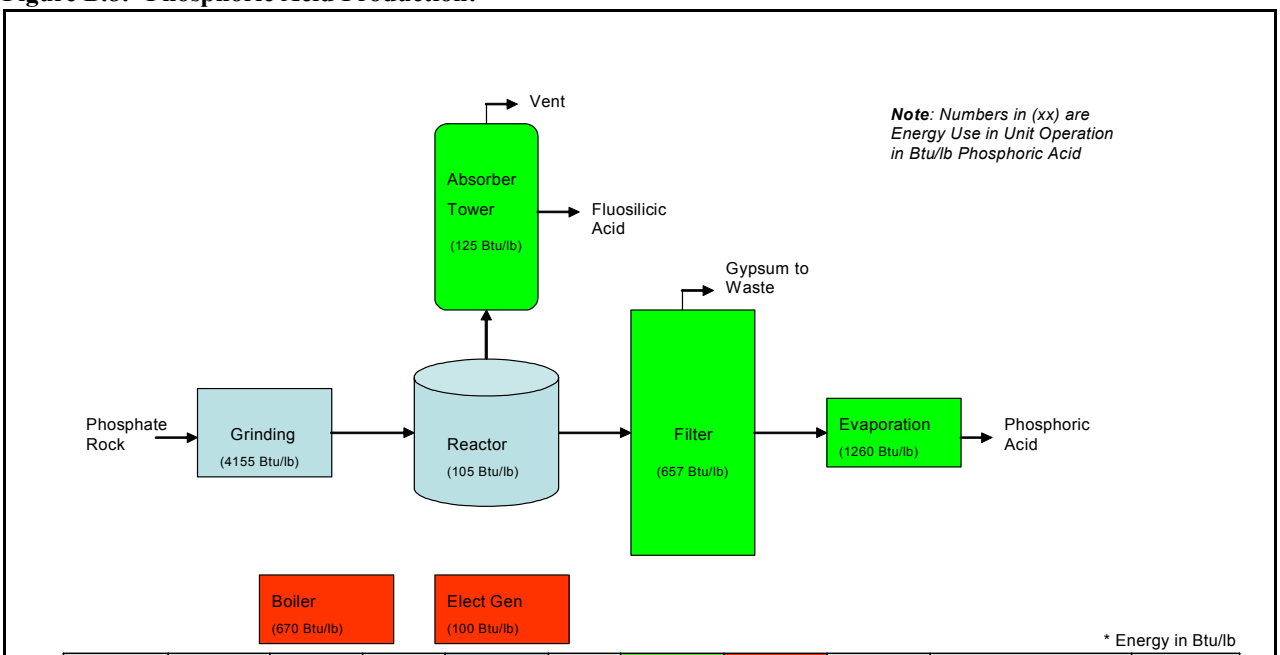

* Energy in Btu/lb

Chemical	Annual Production (lbs/yr)	Total Energy Required	Process Energy Input	Reaction Operations	dHrxn	Separation Operations	Energy Conversion	Separation Energy (Btu/yr)	Alternative Technology (Savings)	Potential Savings (Btu/yr)
Phosphoric Acid	2.38E+10	8194*	6659*	4260*	-413*	2042*	770*	4.86E+13	Membrane, extraction or crystallization (20% Reduction in Evaporation Energy)	6.00E+12
% of Input				64.0%	-6.2%	30.7%	11.6%			

Oxygen and Nitrogen (see Figure B.9 for process flowsheet)

Significant energy savings can be made in the separation of O_2 and N_2 through the use of membranes. The compressor in this cryogenic process consumes 91% of all the energy input to the process. It is estimated that the application of alternate technology such as membrane could reduce the overall energy consumption by 50% which is of the order of 23 TBtu/yr. It should be noted that such membrane development is currently part of the DOE Fossil Energy program and is not recommended for inclusion in the DOE EERE-ITP program.

Figure B.9: Oxygen/Nitrogen Production:

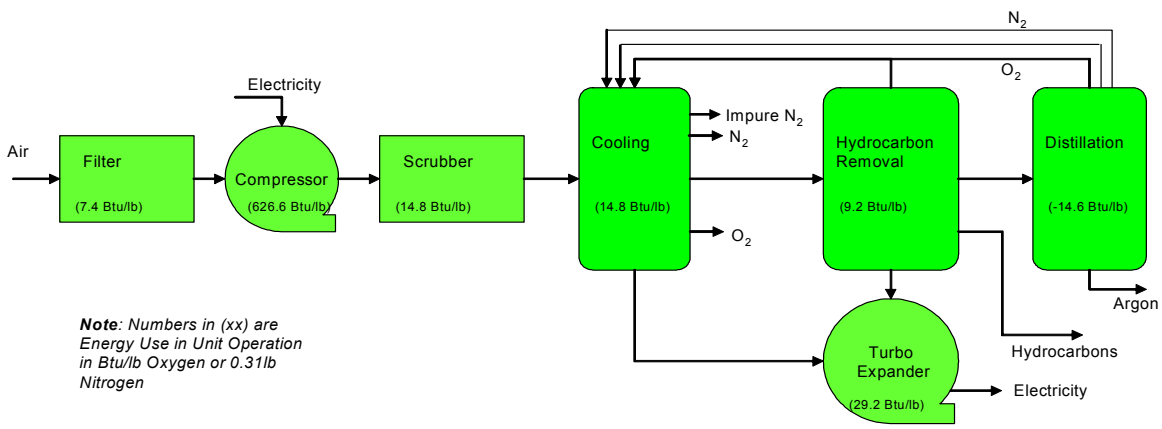

* Energy in Btu/lb

Chemical	Annual Production (lbs/yr)	Total Energy Required	Process Energy Input	Reaction Operations	dHrxn	Separation Operations	Energy Conversion	Separation Energy (Btu/yr)	Alternative Technology (Savings)	Potential Savings (Btu/yr)
Oxygen	6.77E+10	687.2*	687.2*	0*	0*	687.2*	0*	4.65E+13	Membrane (50% Reduction in Energy)	2.30E+13
% of Input				0%	0%	100%	0%			

Lime and Sodium Carbonate (see Figures B.10 and B.11 for the process flowsheets)

Analysis of the lime and sodium carbonate processes did not reveal any significant opportunities for energy savings in the separation operations which represent 1% and 16% of the total energy input to the processes respectively. In the production of lime the single greatest use of energy is in the kiln (51%). The endothermic heat of reaction consumes an additional 42%. In the production of sodium carbonate, the major energy consumers are the kiln and the calciner totaling 35% of the energy input. The endothermic heat of reaction consumes an additional 24%. As noted above a major energy consumer in both the processes is the energy lost from the kiln and calciner to the air discharged to the stack. O_2 enrichment of the air to the kiln was considered to reduce the mass of nitrogen heated and released to the stack. It is estimated that the use of membranes to enrich the O_2 by reducing the mass of nitrogen by 50% could save 74 Btu/pound of lime produced or about 3 TBtu/yr. The savings in the sodium carbonate industry are estimated at about only 0.8 TBtu/yr. However these savings are out-weighed by about a factor of 4 in the energy cost of enriching the O_2 based on the O_2/N_2 industry (this is based on a 50% reduction in the current energy consumption in the O_2/N_2 industry described above). Vastly more energy efficient O_2/N_2 separations could reduce the energy consumption in the lime and to a lesser degree in the sodium carbonate industries.

Figure B.10: Lime Production:

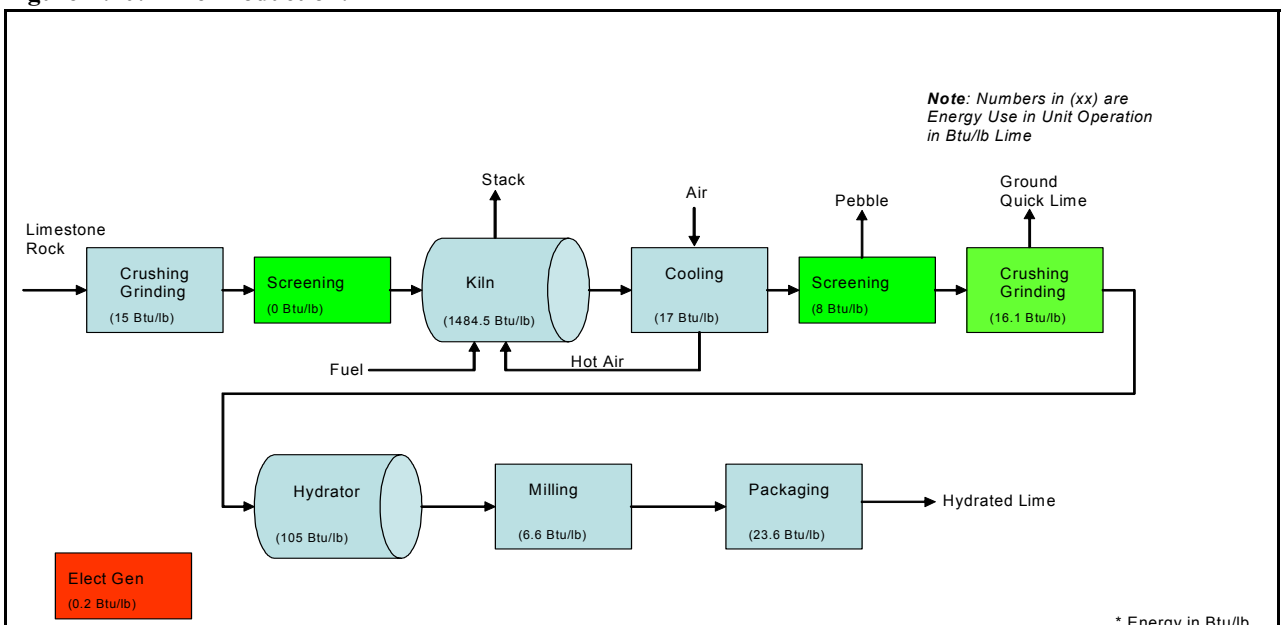

* Energy in Btu/lb

Chemical	Annual Production (lbs/yr)	Total Energy Required	Process Energy Input	Reaction Operations	dHrxn	Separation Operations	Energy Conversion	Separation Energy (Btu/yr)	Alternative Technology (Savings)	Potential Savings (Btu/yr)
Lime	4.06E+10	2892.1*	2892.0*	1651.7*	1208*	32.1*	0.2*	1.30E+12	Significant advances to membrane technology for O_2 enrichment may allow decrease in N_2 to kiln (5% reduction in energy to Kiln)	3.01E+12
% of Input				57.1%	41.8%	1.1%	0%			

Figure B.11: Sodium Carbonate Production:

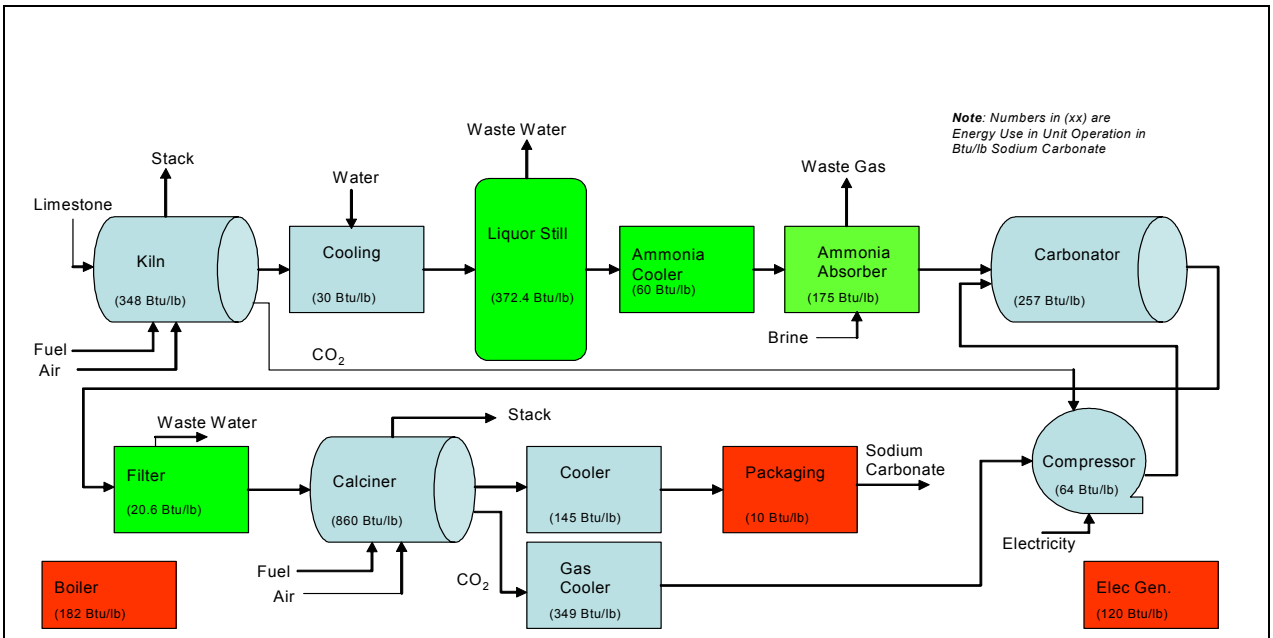

* Energy in Btu/lb

Chemical	Annual Production (lbs/yr)	Total Energy Required	Process Energy Input	Reaction Operations	dHrxn	Separation Operations	Energy Conversion	Separation Energy (Btu/yr)	Alternative Technology (Savings)	Potential Savings (Btu/yr)
Sodium Carbonate	2.31E+10	4387*	3945*	2053*	952*	628*	312*	1.45E+13	Significant advances to membrane technology for O_2 enrichment to allow decrease in N_2 to kiln (10% reduction in energy to Kiln)	8.06E+11
% of Input				52.0%	24.1%	15.9%	7.9%			

Pulp and Paper Industries (see Figure B.12 for the process flowsheet)

The separation technology involved in these industries is primarily associated with the removal of water from the mass of pulp and cellulose fibers. Steam driven evaporation consumes the bulk of the separations energy. A small fraction is also consumed in mechanical separation steps. The major fraction of the pulp consumed in the manufacture of paper and paperboard in the United States utilizes the kraft process. In many cases, pulp production is integrated directly with the paper mills. As a result separate production data in terms of pounds per year for pulp and paper is problematic. The initial process steps for the production of paper in an integrated mill and those of a standalone Kraft pulp mill are identical. As a result the analysis for this report focused primarily on the integrated mill.

Analysis of the integrated paper mills indicated that the primary opportunities for energy savings in the separation operations are associated with multiple evaporators which represent 117% of the total energy input to the processes. (Note: Greater than 100% of the total energy input indicates that these operations consume not only all of the external energy input to the process but a fraction of the energy released in the exothermic reactions involved.) The multiple evaporators consume 30% of the total energy input to the process. They currently utilize steam to evaporate water. Self cleaning membranes or filters to remove water without vaporization are estimated to potentially save 30% of the energy consumed in this unit operation. The estimated energy savings is 110 TBtu/yr. The multiple effect evaporators are the second largest consumer of energy within the paper mill; the largest fraction of energy usage is associated with the drying step at 36%. However no opportunities for the application of new separation materials or techniques were readily apparent in this case.

Figure B.12: Paper Production:

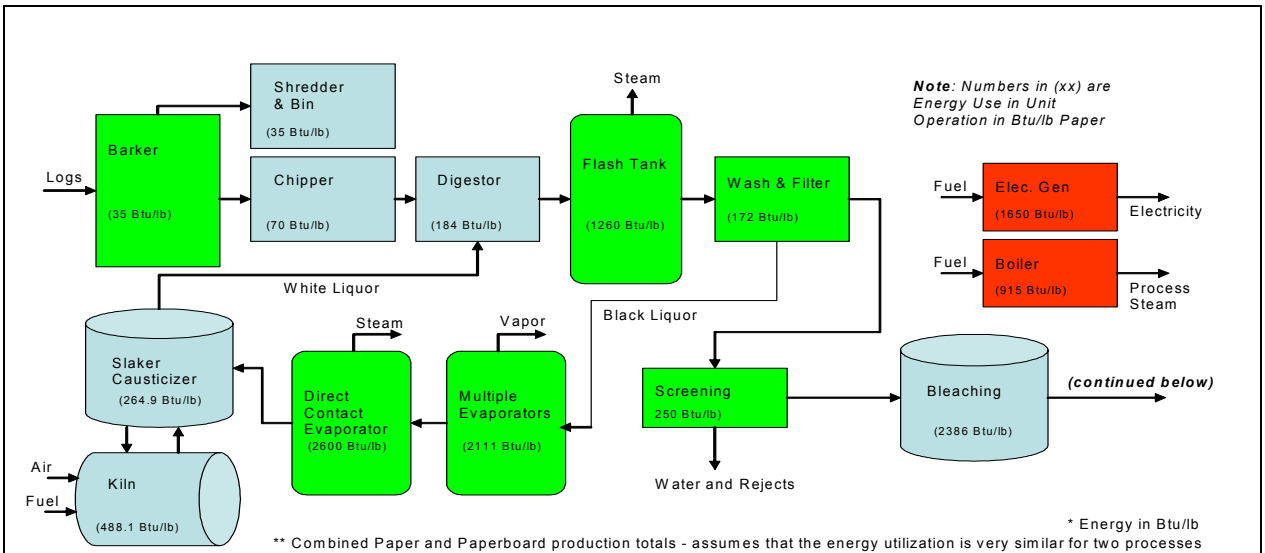

* Energy in Btu/lb

** Combined Paper and Paperboard production totals - assumes that the energy utilization is very similar for two processes

Chemical	Annual Production (lbs/yr)	Total Energy Required	Process Energy Input	Reaction Operations	dHrxn	Separation Operations	Energy Conversion	Separation Energy (Btu/yr)	Alternative Technology (Savings)	Potential Savings (Btu/yr)
Paper	1.78E+11**	19636*	8726*	3629*	-9072*	10204*	2565*	1.81E+15	Membrane or crystallization (30% Reduction in Multiple Evaporator Energy)	1.13E+14
% of Input				41.6%	-104.0%	116.9%	29.4%			

Figure B.13:

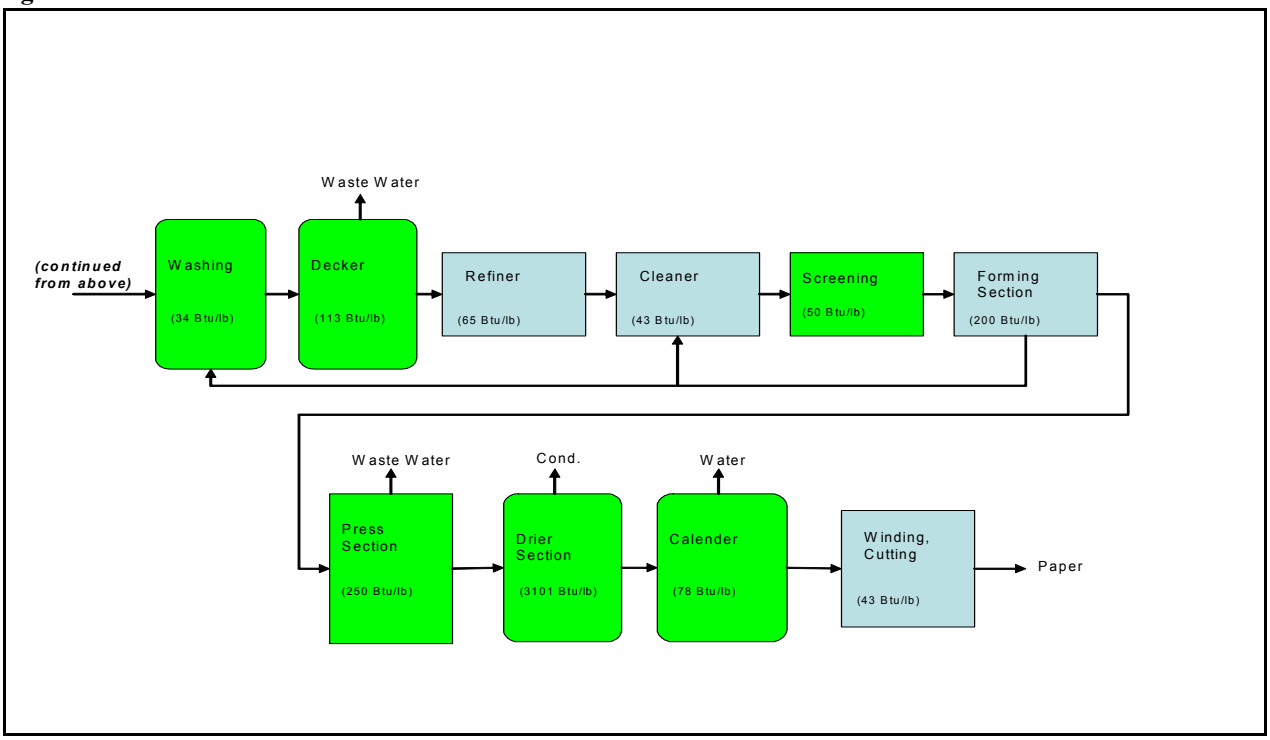

References

[1] Brown, Harry L., et. al., *Energy Analysis of 108 Industrial Processes*, Fairmont Press, May 1996.

[2] Worrell, Ernst, et. al., Energy *Use and Energy Intensity of the U.S. Chemical Industry*, LBNL-44314, April 2000.

[3] Humphrey, Jimmy L., Keller, George E., II, *Separation Process Technology,* McGraw-Hill, 1997.

[4] *Guide to The Business of Chemistry, 2003*, American Chemical Council.

[5] Schwarz, Jeanette, *SUSTAINABILITY METRICS: MAKING DECISIONS for MAJOR CHEMICAL PRODUCTS and FACILITIES*, Final Report 2001, Bridges to Sustainability

[6] *Brief Characterization of the Top 50 Commodity Chemicals*, Pacific Northwest National Laboratory, 1994.

[7] *The Fertilizer Industry's Manufacturing Processes and Environmental Issues*, United Nations Industrial Development Organization, 1998.

[8] *Energy and Environmental Profile of the U.S. Chemical Industry*, Department of Energy, Office of Industrial Technologies, May 2000.

[9] *Energy and Environmental Profile of the U.S. Petroleum Refining Industry*, Department of Energy, Office of Industrial Technologies, December 1998.

[10] *A Pilot Study of Energy Performance Levels for the U.S. Chemical Industry*, June 2001, Bridges to Sustainability.

[11] *Energy Analysis of 108 Industrial Processes*, Drexel University, October 1980.

[12] Petrochemical Processes 2003, *Hydrocarbon Processing*, March 2003.

[13] *Technology Roadmap for the Petroleum Industry (Draft),* U.S. Department of Energy, Office of Industrial Technologies, February 2000.

[14] Humphrey, Jimmy L., et. al., *Separation Technologies - Advances and Priorities*, DOE/ID/12920-1, U.S. Department of Energy, Office of Industrial Technologies, Feb 1991.

[15] Humphrey, Jimmy L., *Separation Technologies: Marketing Factors. Final Report*, Humphrey (J.L.) and Associates, Austin, TX, December 1991.

[16] Ullmann, Fritz, *Ullmann's Encyclopedia of Industrial Chemistry*, 6th completely rev. ed., Weinheim: Wiley-VCH, 2003.

[17] Production of Ammonia, Best Available Techniques for Pollution Prevention and Control in the European Fertilizer Industry, European Fertilizer Manufacture's Association (EFMA-a), 2000.

[18] Production of Phosphoric Acid, Best Available Techniques for Pollution Prevention and Control in the European Fertilizer Industry, European Fertilizer Manufacture's Association (EFMA-p), 2000.

Appendix C: Opportunities for Novel Separation Systems in the Forest Products Industry

Prepared by Gerald Clossett
Under Contract with ORNL for the U.S. DOE

Summary

The most important separation technologies to be developed for the pulp and paper industry (P&P) are those that will allow P&P mills to significantly reduce their energy consumption and the volume and environmental impact of their effluent. In order to achieve this, the novel separation technology must perform effectively and reliably on complex and "dirty" streams in mill operating environment. The goals of greatest benefit to industry and society are those that will lead to greater "mill closure", that is greater stream recycle and reuse. These goals are in order of priority:

- recycling bleach plant filtrates into mill processes, and
- separating contaminants and recycling the final mill effluent.

This report recommends that the following technologies be evaluated for possible replacement by membrane or other novel separation systems:

- Evaporative concentration, a highly energy-intensive process used for various applications in P&P mills. A substitute process would have extensive application for the closure of mechanical pulping mills and kraft bleach plants.
- Ion exchange system used for the removal of non-process elements or NPEs in the kraft bleach plant.
- Crystallization for the removal of sodium and potassium chlorides in the kraft recovery process.
- Conventional biological wastewater treatment systems to remove contaminants from mill effluents to such a degree so as to allow permeate recycling.

When considering membrane treatment for the above processes, it is recommended that the feed to the membrane system be pre-treated using conventional systems. Also all previous experience with membrane separation systems should be carefully reviewed to gain insights as to where development of new membrane materials could lead to commercial implementation. The development of electrochemical membrane systems and bipolar membrane electrodialysis should be particularly examined closely as they are promising technologies with high potential.

It is also recommended that novel means to fractionate the components of wood be investigated in order to improve overall material use and potentially produce value-added products.

This report provides the following:

- rationale for the above recommendations
- brief statement of current practices
- summary of what novel separation techniques have been attempted
- brief statement of potential benefits
- references that will allow further detailed work in these areas

Useful General References

1. *"Pulp Mill Process Closure: a Review of Global Technology Development and Mill Experience in the 1990's"*. NCASI, Technical Bulletin No. 860, 2003.
2. *"Setting the Industry Technology Agenda",* the 2002 Forest, Wood and Paper Industry Technology Summit, TAPPI press, 2001.
3. *"Membrane Technology Applications in the Pulp and paper Industry",* NCASI, Technical Bulletin No. 763, 1998.
4. C. Oloman, *"Electrochemical Processing for the Pulp and Paper Industry*", The Electrochemical Consultancy, England, 1996.

C.1 Introduction

For years, industry, spurred by more demanding energy and environmental regulations while keeping the production costs in check have been driven to:

- conserve water,
- conserve energy,
- recover chemicals, and
- prevent emission of harmful environmental pollutants.

Considerable research effort has been dedicated to the above, under the umbrella goal of the "effluent-free mill", "minimum-impact manufacturing", "closed-cycle mill" and others (1). In this report the term "closed-cycle mill" is used. Drivers for the industry that are relevant to this goal include (2):

- reducing energy use,
- eliminating effluents without increasing cost or impacting the product quality,
- eliminating contaminants that inhibit water reuse, and
- developing novel fractionation technology leading to clean separation of cellulose, hemicelluloses, lignin and extractives.

In order to meet the above goals, new or greatly improved pulping, bleaching, recovery, effluent treatment and allied technologies that are cost-effective also, would need to be developed. To achieve the "closed-cycle" mill, the mill effluents must be treated in such a way that they can be reused in the mill processes. This is possible if the organics, fibers and inorganic pigments can be separated and then treated separately. Water reuse can be maximized if separation processes can be developed to remove contaminants from in-mill process effluents as well as from the final effluent stream. These separation processes must be done in a way that is profitable to the industry and beneficial to the society. Once separated various options then become available such as:

- Organics can be burned in the recovery boiler: the energy value of the organics is recovered and a significant cause of pollution is eliminated.
- Fibers and fiber fragments can either be reused or converted to a value-added product such as alcohol.
- Treated effluent can be recycled as process water.

The challenge therefore is to demonstrate cost-effective separation technologies that allow a mill to separate various components of its waste stream so they can be concentrated and treated separately. The reuse or additional treatment necessary for the concentrate and permeate to be dealt with are also important.

Novel separation processes, in particular membrane processes, have not received wide application in the U.S. pulp and paper (P&P) industry although considerable experimental work has been and continues to be carried out. In a few instances, membrane separation processes have been successfully used in specialized applications like removing certain contaminants from mill effluents,

particularly in Japan and Scandinavia (3). These applications resulted from special circumstances usually involving a mill permitting issue where existing, conventional P&P technologies did not provide a solution. These mills were willing to go "outside the box" and try unproven technologies (and incur more operational costs) to solve the problem. *Why has membrane technology not received more attention or gained widespread use in the U.S. P&P industry?*

A variety of reasons have created a view on the part of U.S. industry personnel that membrane technology is "exotic" and unproven; not cost effective due to short membrane life and therefore, high operating costs; and that they require significant operating and maintenance attention. This implies that membrane technology is not "robust" enough to treat large volumes of liquids 24/7 in a "real" mill operating environment without operators paying much attention to the process. Mill operators are more comfortable with well-known systems to achieve separation such as evaporation.

It is useful to understand examples of membrane use that have been unsuccessful because of membrane or system deficiency, in the expectation that novel developments can overcome these limitations. A particularly useful review is available in the National Council on Stream Improvement (NCASI) Bulletin # 763 reviewing membrane technology applications in the pulp and paper industry (3).

C.2 Approach to Identifying Potential R&D Opportunities

In approaching this assignment, several factors can be used as guide:

- Consultant's experience of the industry.
- The statement of industry needs, developed by industry published in the book "Setting the Industry Technology Agenda" (2), a compilation of industry's most important needs developed at the 2001 Forest, Wood and Paper Industry Technology Summit.
- Previous and current industry research and experience with novel separation technologies, particularly membranes (1, 3, 4). These previous attempts and why they failed can indicate what improvements are necessary to make the process work.
- Focus on potential uses of membrane technologies to solve some of industry's most important needs. While benefiting industry, it is clear that solving these problems will result in substantial benefit to society in the form of energy savings and in substantial reduction in environmental impact. The following discussion is based on this approach.

This report is focused on identifying opportunities for separation technology R&D to treat effluent from the various mill processes (of which kraft bleach plant closure is the greatest challenge) and then the final mill effluent. These tasks are not independent of each other. For example, in kraft mills bleach plant filtrates contribute a significant portion of the pollutants emitted by the mill. For that reason bleach plant closure is the most challenging task of achieving a closed-cycle kraft mill. If bleach filtrates can be largely eliminated by treating and recycling them into the process, then the task of treating the final effluent becomes easier. In efforts to minimize the environmental footprint of

pulp and paper mills, research efforts need to be focused on developing innovative internal as well as end-of-pipe modifications to significantly reduce discharge of contaminants and enable substantial effluent recycle and reuse as process water. Therefore finding cost effective separation systems to achieve bleached plant closure have a very high priority. Dealing with these issues will almost surely require the development of several technologies to make the system economically viable. For this reason, "bleach plant closure" section of this appendix also focuses on the need to find ways to recover chemicals to improve the economics of the process. Membrane processes have shown promise and improving economics are essential to make implementation of innovative closed-cycle technologies much more likely.

C.3 Overview of Some Best-Value R&D Prospects

The report highlights areas that represent the greatest challenge to reusing mill process and final effluent streams and offers very good prospects for energy savings if alternate technologies can be developed. A few examples have been summarized to illustrate current practice, experimental approaches and opportunities for novel membrane separation technologies. The report provides only an overview of the issues at hand to allow an initial understanding of the problems. A detailed investigation and analysis of the opportunities presented can be carried out as the interests are.

Treatment approaches are discussed for the following processes, in order of priority:

1. **Kraft Bleach Plant Closure**
2. **Issues Related to the Economic Viability of ECF Mills**
3. **Examples of Treatment to Significantly Reduce Final Effluent**
4. **Novel Method of Fractionation of Wood**

C.3.1 Kraft Bleach Plant Closure

<u>Background</u>
While significant strides have been made to reduce water use, its usage in a modern bleached kraft mill still is of the order of 100 m^3 /ton of product. A 1,000 ton a day paper mill therefore utilizes about 100,000 m^3/day. Over the last 15 years considerable effort has been expended to reduce or eliminate bleach plant filtrates. Chlorine gas has virtually been eliminated and most kraft bleach plants use chlorine dioxide as the main bleaching agent. They are referred to as Elemental chlorine-free or ECF mills. While Totally Chlorine-free (TCF) bleaching has made some inroads, ECF bleaching by far represents the majority bleaching method today and will be considered as the model for this discussion. EPA regulations required that all U.S. mills convert to ECF or TCF bleaching by 2001, and most converted to ECF. The most serious challenge to achieving the "closed-cycle" in a kraft mill is stream closure in the bleach plant.

Current Practice

Bleach plant effluents are generally treated in the mill effluent treatment facilities before discharge (all water entering the bleach plant is discharged as wastewater or removed with the pulp). Bleach filtrates represent a significant fraction of the environmental impact and water usage by kraft P&P mills. Bleach plant effluents contain some of the more objectionable pollutants emitted by a kraft mill.

Approaches to Closure

Most experimental efforts to reduce or eliminate ECF bleach effluent have fallen into three categories:

a. Evaporation of bleach filtrates (concentration of filtrates by evaporation)
b. Physical separation treatment of filtrates to remove organics (ultrafiltration and microfiltration)
c. Recycling the bleach filtrates as wash water to the post-oxygen washers (ion exchange and crystallization)

a. Evaporation of bleach filtrates:

Evaporation has been tried to separate non-volatile substances. Water recovered from condensate is clean and can be recycled as process water. The concentrate can be further treated and disposed of. Many experiments and pilot trials have been conducted (1). For example, first-stage bleach plant acid filtrate is evaporated to a 10% concentrate (5). The condensate is segregated into a clean condensate (80%) which can be reused in the process and a "foul" condensate. The foul condensate contains methanol and other contaminants and needs further stripping and cleaning. The concentrate is further concentrated and burned in the recovery boiler.

Commercial Application

Several mills in Scandinavia and Canada have installed commercially available low temperature evaporators to concentrate bleach filtrates (1).

Opportunity

Evaporation is extremely energy-intensive. There may be an opportunity for membrane separation processes to accomplish the same degree of separation.

b. **Physical separation treatment of filtrates to remove organics:**

There have been many experimental membrane approaches for removal of organic contaminants from the bleach plant, primarily from the first two stages of the bleach plant, the first stage (C or D stage) and the extraction stage (E stage) (3). These experiments focused on the removal of contaminants like color, COD, BOD and TOC from bleach plant effluents using reverse osmosis, ultrafiltration and microfiltration membranes. Many of those experiments were unsuccessful because of membrane fouling or excessive cost estimates.

Commercial Application

A few applications were commercialized at Japanese and Scandinavian mills but none in the United States so far (3). Treating the membrane concentrate in the recovery boiler would require added recovery capacity that most U.S. mills lack. It would also raise the chloride level in black liquor, leading to plugging of recovery boiler tubes if a chloride removal process was not in place.

Opportunity

Improved membranes and membrane systems that could overcome fouling and have extended life could change the economic picture and lead to greater application. However there are inherent disadvantages resulting from the fact that the whole effluent from these stages is treated resulting in high volume and a large quantity of organic material will undoubtedly contribute to fouling and high costs. A better approach may be to recycle bleach plant filtrates which is discussed next.

c. Recycling the bleach filtrates as wash water to the post-oxygen washers:

There is an inherent problem with a closed-cycle bleach plant and that is the levels of organic and inorganic substances increase within the system. In particular non-process elements (NPEs) which enter the mill with the wood, water and process chemicals can build-up in a closed system. Such NPEs include calcium, magnesium, manganese and iron. If allowed to build up some of the NPEs can precipitate and form deposits on the process equipment and piping, causing costly mill shutdowns; or they can catalyze the decomposition of bleaching chemicals and generally increase the dead load in the process. Also high levels of chloride and potassium in the liquor cycle of the chemical recovery process can cause corrosion and plugging of boiler tubes. Successful implementation of recycling of bleach plant filtrates therefore hinges on removing contaminants at two locations in the mill: NPEs in the bleach plant proper and sodium and potassium chlorides in the recovery cycle.

Commercial Application

While many studies have been carried out in the last 15 years, few processes were in fact implemented at the mill level. One such process is the BFR™ process, which was implemented on the softwood line of the Champion International mill (now known as Blue Ridge Paper Products) in Canton, NC in 1996 (6, 7, 8). The BFR™ process enables filtrates from an ECF bleaching sequence to be recycled without significantly impacting the performance or operation of the bleach kraft pulp production complex. Bleach plant filtrates are used as wash water on the post oxygen washers. The dissolved solids from the bleaching process then move counter-currently with the pulp and become components of the black liquor. The dissolved organics from bleaching are destroyed in the recovery boiler. The inorganic components are removed by two distinct processes: the Chloride Removal Process (CRP) installed in the recovery process, and the Minerals Removal Process (MRP) located in the bleach plant.

- **CRP:** Chloride and potassium are purged from the recovery boiler electrostatic precipitator ash; the ash is slurried in water to a 26% dissolved solids concentration, fed to the crystallizer where the solution is evaporated to above the solubility limit for sodium sulfate but below the limit for potassium and sodium chloride. The sodium sulfate (referred to as "saltcake") is crystallized and filtered out (up to a 98% efficiency) while the filtrate is sewered. Excess saltcake is disposed of.
- **MRP:** To minimize scale formation on washers and evaporators heat transfer surfaces, a portion of the D100 filtrate is treated in a MRP to purge the mineral impurities such as calcium, magnesium, manganese and iron. The MRP consists of two-staged filtration (to remove fibers and suspended solids) followed by two parallel cation-exchange beds. The treated filtrate is recycled to the D100 washer.

Experimental Work

Membrane approach for removal of chloride and potassium from the recovery process was experimented with in lab. Electrochemical removal of chloride was effected by treating the precipitator catch as the catholyte in an electrochemical cell divided by an anion membrane. Although the experiments were successful, process efficiency was poor precluding further development work (4, p.121). Authors concluded "Chloride removal efficiency could be substantially improved with modern anion membranes having high permselectivity for Cl^-." No information was found regarding membrane development work being carried out to separate minerals from the D100 bleach filtrate.

Opportunity

For a membrane process to potentially save large amounts of energy used by the CRP, the filtrate would need to be sufficiently clean to be reused as process water. Developing a membrane system that is more reliable and cost-effective than the MRP is another potential R&D area.

C.3.2 Issues Related to the Economic Viability of ECF Mills

Several opportunities exist where the use of membrane technology could be used to recover chemicals and thus improve the economic viability of ECF mills.

a. Recovery of Bleach Chemicals

Background

The conversion of most bleach processes to ECF has led to a rapid decrease in the use of chlorine and greater use of chlorine dioxide (ClO_2), manufactured on site by ClO_2 generators. These generators produce sodium sulfate and currently much of this saltcake is discharged in mill wastewaters. The disposal of the saltcake has created a sodium and sulfur imbalance in kraft mills and many mills now must buy more make-up caustic at a higher price. Caustic price

has increased because chlorine and caustic soda are produced concurrently in a fixed stoichiometric ratio and while demand for caustic has remained strong, demand for chlorine has dwindled forcing manufacturers to raise the caustic manufacturing costs. Chemical make-up is governed by the losses of sodium and sulfur from the process. In the past, this loss was about 2/1 and mill operators were able to use saltcake as make-up for sodium and sulfur. With tight control of sulfur emissions, the ratio has changed as much less sulfur make-up is needed. The sodium available in saltcake is lost with its disposal. This is both an economic loss and a potential environmental problem as salcake disposal may become more problematic in the future. (Another source of saltcake is the material crystallized in a CRP crystallizer as described above).

Experimental Work

Salt-splitting electrochemical processes have been tried experimentally for salts such as Na_2SO_4, $NaClO_3$ and Na_2CO_3. These include electrohydrolysis and bipolar membrane electrodialysis (BME) (4, p. 166). Sodium sulfate has been split more efficiently in 3-compartment cells with one cation and one anion membrane. The economics of integrating BME into kraft mill operations for on-site production of caustic soda and sulfuric acid from saltcake appear promising if certain assumptions are made (9). While tests at the pilot level have been carried out, it appears that high capital cost and questions about membrane life have to-date prevented commercial use. The electrohydrolysis conversion of sodium carbonate to produce 15% sodium hydroxide using bipolar membranes showed good economic promise but ran into problems due to the loss of membrane integrity and was not commercialized either (4, p. 167).

Opportunity

Caustic soda (NaOH) consumption in the United States by all mills was 2.5 million tons, valued at $465 million in 1997 (probably not much changed by 2003). If a new membrane system was developed that allowed mills to make their own make-up caustic from sodium sulfate, they could significantly reduce their purchase of the material. Assuming a 10% inroad in five years it would amount to a $46 million cost savings.

b. Tall Oil Recovery

Background

In the kraft process a number of organic compounds are recovered from the pulping and recovery processes and treated for commercial use. “Turpentine” is produced from digester condensates and “tall oil” from soaps skimmed from the black liquor.

Current Practice

Crude tall oil is a mixture of fatty (palmitic, stearic and oleic) and rosin aids (abietic and pimaric) resulting from the acidification of sodium soaps skimmed from the black liquor. Acidification is carried out with sulfuric acid and that produces sodium sulfate as a byproduct.

While sodium sulfate is used as a make-up chemical in the kraft liquor cycle, ECF mills (using 100% ClO_2) have an excess that must be disposed of.

Experimental Work
An electrochemical process using a cation membrane has been tried experimentally (4, p.121) for producing tall oil from sodium soaps. This avoids use of sulfuric acid and production of sodium sulfate. However the method has not been commercialized because of fouling of the cation membrane by organic compounds and divalent metal ions (Ca, Mn, Mg).

Opportunity
Development of membranes and membrane systems that allow for producing tall oil from sodium soaps would have substantial economic and environmental benefits.

C.3.3 Examples of Treatments to Facilitate Recycling of Final Effluent

There have been few attempts to treat and recycle the final mill effluent. The most common approach is to use evaporation technology to concentrate effluent from various mill processes (some of these were discussed above) and then the final effluent. The condensate is clean enough to be reused in the mill as process water. The concentrate is a low-volume stream that can be further treated to eliminate contaminants or to allow recycling of useful chemicals. Two closed-cycle BCTMP (bleached chemithermo-mechanical pulp) mills built in the 1990s use evaporation to treat the entire mill effluent. This is a highly energy intensive approach.

a. Mechanical Pulp Mills

Background
In the past ten years new mechanical pulp mills have either been chemithermomechanical pulping (CTMP) or bleached CTMP (BCTMP) mills. A conventional mechanical pulp mill can produce about 40 m^3 of liquid waste per ton of pulp. A 1000 tons/day mill therefore can produce 40,000 m^3 of liquid wastes per day. Contaminants typically include wood extractives, fibers and fiber fragments and residual chemicals mainly from the pulping and bleaching processes.

Current Practice
The effluent is treated in primary and secondary treatments. Two modern BCTMP mills operate in closed-cycle mode in Canada by evaporating the effluent from 8 to 35% solids (10). The effluent liquor from this process is further concentrated to 68% in concentrators. These are energy-intensive processes prone to fouling problems.

Experimental Work
A research program was carried out in Canada to evaluate the economic and technical feasibility of using membrane separation processes in treating final effluents of CTMP and

BCTMP mills (11). While substantial contaminant (TSS, TOC and COD) removal was achieved that level was not sufficient to allow permeate recycle to the process. Another effort using microfiltation technology arrived at the same conclusion (12). The author concluded "although the microfiltration membrane retains the suspended solids in the BCTMP effluent, the permeate contains high levels of total dissolved solids which are not removed. Further treatment is required in order to allow the integration of this stream into the process".

Opportunity

Evaporation is the only commercial process that allows a substantial amount of recycle of the final effluent to the process. Evaporative concentration is a very energy-intensive process. Experimental membrane systems have not been effective. These research efforts should be investigated and efforts made to develop a cost-effective membrane filtration process to concentrate the effluent from 8 to 68%. This would require a robust system capable of treating large volume, dilute streams. If successful this development would result in substantial energy savings; if it is also cost effective, there is a high likelihood that the process would be used by many existing mechanical pulp mills.

b. Closure of the Whitewater Circuit of the Paper Machine

Background

Paper machine white water is the water that is drained during the formation stage of the paper web. Web forming occurs from fiber suspensions at different stages of flocculation (fibers tend to form flocs depending on fiber type, length and consistency). The suspension of fibers, polymer additives and pigments is applied to a wire moving at high speed to remove the water and begin forming the fiber mat that will become the paper web. Since this suspension is extremely dilute (0.1 to 0.5% consistency) large volumes of "white water" are generated. In many cases this water is sewered and goes to the wastewater treatment plant. The main components of paper machine white water are:

- suspended solids (above 5 microns): fiber and fiber fragments, pigments
- organic materials and dissolved solids: BOD, COD, color
- inorganic salts

Experimental Work

The objective is to remove contaminants so the white water can be recycled and reused. There have been many experimental approaches. A good many of them are described in the1996 TAPPI Minimum Effluent Mills Symposium Proceedings (13). All have shown problems that have prevented full commercial implementation. Attempts to recycle white water without treatment have shown that a gradual increase in the concentration of organic material (color, BOD, COD) occurs. This increase in the level of organic material causes deterioration in the physical properties of the paper. They interact with the polymer additives, reducing their effectiveness. This is therefore both a cost and quality concern. A few examples of experimental approach are:

- A pilot study (14) showed that an anaerobic bed reactor could remove the organic contaminants. Fibers and suspended solids were first removed by flotation; an acidification step converted organic material into fatty acids and biologically degraded the material using an anaerobic fluidized bed. However when tested on a mill scale the salt concentration increased and prevented full mill closure.
- A membrane biological reactor (integrating biological oxidation with ultrafiltration) successfully removed most of the resin and fatty acids, and a high percentage of COD from a newsprint mill whitewater. TDS removal was fair (15). This is a promising technology that needs more development.

Opportunity
A membrane separation system should be considered to remove the organic contaminants and the dissolved salts, thus allowing direct recycle of white water. The benefits will be plenty: significant energy savings (white water temperature is high and recycling means that the water temperature is maintained), reuse of fiber and pigments, and lastly, reduction in fresh water usage. Tackling white water closure would be an easier task than closure of the entire mill effluent because the volume and the level of contaminants are smaller.

c. Recycled Fibers, Improving the De-inking Process

Background
A substantial portion of fiber use for pulp and paper manufacture is recycled, about 40% with a goal of 55%. North American production of de-inked pulp (DIP) was 1.7 million tons in 1999 although capacity was at 2.2 million tons. The presence of contaminants in the effluent of de-inking operation is a significant problem because it prevents recycling of the effluent to the process. In particular flexographic inks are water soluble and are not removed by the conventional flotation processes. It would be desirable to recycle the water but even very small amounts of flexo inks have a detrimental impact on the brightness of the pulp being recycled. Low pulp brightness is a factor that lowers the value of recycling fibers and prevents their use in some high quality applications.

Current Practice
The effluent is sewered and treated in primary and secondary treatments.

Experimental Work
A microfiltration membrane process was successful at removing the flexo ink and suspended solids, thus allowing the permeate to be recycled to the mill (11). No known commercialization exists of this system.

Opportunity
Investigation is required as to the economic viability of the microfiltration membrane process and to determine if a more cost-effective system can be developed to reduce water usage and pollution load.

d. Evaporator Condensate Reuse

Background
Weak black liquor is concentrated from about 15% dissolved solids to about 75% dry solids using sets of multiple effect evaporator sets. Large volumes of evaporator condensates are generated (3). They contain volatile low molecular weight compounds found in black liquor, alcohols, ketones, phenols, organic acids and reduced sulfur compounds. The most contaminated condensates ("foul") are commonly steam-stripped and treated in secondary waste treatment before discharge. The least contaminated condensates are reused in the system.

Experimental Work
Several methods to clean the foul condensates have been attempted, including reverse osmosis (1, p. 13).

Opportunity
Condensates are hot and good source of process water if cleaned up. Developing a cost-effective method to separate contaminants could lead to substantial reuse of condensates in the process. Benefits include reductions in energy, water usage and the final effluent volume.

e. Concentration of Black Liquor

Background
The implementation of energy-intensive pollution control technologies (steam stripping of condensates, burning of non-condensable gases, increased evaporation load) has increased energy use at many mills. Means of increasing energy efficiency and improving the mill economic viability by increasing production has been investigated. As stated above in subsection d. (Section C.3.2.), concentration of weak black liquor is a highly energy-intensive process.

Experimental Work
One method examined involves precipitation of lignin from the weak black liquor by electrolysis (4, p. 117), thus reducing the evaporator load. The Pulp and Paper Research Institute of Canada (PAPRICAN) estimates an 8% increase in productivity and favorable economics. Pilot trials were unsuccessful because of fouling of the anode.

Opportunity
Review PAPRICAN's work and determine if this problem can be solved and lead to commercial application of this process.

f. Treatment of Bleached Kraft Mill Final Effluent

Background

Pulp and paper mills produce large volumes of mill effluent and water usage is a critical issue. Contaminants typically include phenols, resin acids, carboxylated salts, chlorinated organics, fibers and fiber fines and pigments in a fairly dilute condition. The parameters regulated include color, BOD, TSS, acute toxicity, AOX and COD. In a typical mill the effluent is treated in primary and secondary treatment facilities. The objective of primary treatment is to remove suspended solids from effluents through clarifiers and/or flotation cells. Secondary effluent is employed to remove dissolved organic materials. Biological secondary treatment includes aerated lagoons, activated sludge systems and anaerobic reactors. If further treatment is required beyond secondary treatment, more common approaches have focused on tertiary treatment (such as coagulation) to separate contaminants in the final mill effluent and allow water reuse. These approaches are not extensively demonstrated commercially for mill application but have potential. Primary treatment is used to remove suspended solids from effluents through clarifiers and/or flotation cells and secondary effluent is employed to remove dissolved organic materials. Biological secondary treatment includes aerated lagoons, activated sludge systems and anaerobic reactors. The quality of the mill effluent after primary and secondary treatment is still not good enough to be reused as mill water. Most tertiary treatments can reduce final mill contaminants but not eliminate them sufficiently that the effluent can be recycled.

Commercial Application

An example of tertiary treatment (a dual polymer process that uses coagulation and flocculation technologies) implemented in a Canadian mill (15) was successful in removing >60% of effluent color (the driving force for the installation) while also removing a fair amount of the other contaminants. While substantial, that level of removal was not sufficient to enable recycling of the effluent to the mill.

Opportunity

Develop a membrane separation system that removes the remaining contaminants from the above effluent to a water-quality level thereby enabling recycling of the effluent as process water.

g. Closure of Newsprint Mill Effluent

Background

Attempts to close newsprint mills have focused on treatment of the final mill effluent to produce a water quality level close to that of fresh water. Limits therefore would have to be established around general water quality parameters such as pH, turbidity, color, dissolved solids, alkalinity, hardness and free CO_2; cations such as Na, Fe, Mn, SiO_2; and anions such as Cl and SO_4^{2-}. An additional treatment following secondary treatment would have to meet the targeted standards.

Experimental Work
A newsprint mill (17) evaluated treatment of the final effluent and recycle to the fresh water intake purification plant. Coagulant-aided primary treatment followed by biological treatment (pilot activated sludge process) removed 95–99% of BOD, resins and fatty acids and 91% of COD. Conclusions were that the final treated effluent was comparable in quality to fresh water in terms of the water quality parameters (mentioned above), but levels of COD, color, sulfate, aluminum, calcium, chloride and SiO_2 were higher, leading to concern of build-up to unacceptable levels in a closed-cycle condition.

Opportunity
Develop a membrane process to remove the COD, color, sulfate aluminum, calcium, chloride and SiO_2 to allow the final effluent to be recycled to the water intake purification plant.

C.3.4 Novel Fractionation of Wood

Background
In its strategy-setting agenda (2), industry researchers indicate the need for novel separation technologies to provide clean fractionation of wood into its basic components, cellulose, hemicelluloses, lignin and extractives. An example of the potential of such separation can be made with hemicellulose recovery. In most conventional pulping processes such as Kraft pulping, most of the hemicelluloses are destroyed. Yet they represent a substantial economic potential. For example, hardwood xylan comprises 20-35% of most hardwood furnishes. The energy potential of this recovered material is huge. For example, if recovered and converted to alcohol it could yield an added $40-84/ton of pulp, a very significant number (2, p.167). Cost-effective hydrolysis of cellulose has not been achieved. The isolation of hemicelluloses would have to be achieved without damage to the cellulose so as not to compromise its value in papermaking.

Experimented Approach
Projects have recently been initiated to 1) investigate separation of hemicellulose from conventional wood chips in both low and high molecular weight form without damaging the cellulose; 2) testing of hemicellulose-extracted wood chips in conventional and sulfur-free pulping systems; 3) carry out lignin-fractionation research and development from sulfur-free pulping systems.

Opportunity
This is a research need where very little work has yet been carried out within the context of commercial applications in the pulp and paper industry. The development of novel separation technologies is needed to develop this potential.

C.4 Conclusions and Recommendations

It is recommended that novel separation systems be investigated as replacement for the following technologies:

- Evaporative concentration for the closure of mechanical pulping mills and possibly closure of kraft bleach plants. It has been developed extensively at the experimental and pilot stage with a few instances of commercial implementation. It is a highly energy-intensive process and a substitute process would have extensive application.
- Ion exchange system for the removal of NPEs in the kraft bleach plant
- Crystallization for the removal of sodium and potassium chlorides in the kraft recovery process.
- Conventional biological wastewater treatments systems to remove contaminants from the final mill effluent to such a degree as to allow recycling of the final effluent. It is also recommended that membrane systems be investigated to remove contaminants still present in the wastewater after tertiary treatment.

Membrane processes have been tried experimentally with some success for the above applications but very few have reached a commercial stage and therefore present an opportunity for the development of novel membrane materials and systems.

When considering membrane treatments for the above processes, it is recommended that they be integrated with existing conventional mill systems to pre-treat the feed. For example contaminants such as fiber fragments, pigments can be removed by conventional filtration and screening systems. Another example would be to focus the membrane separation process on removing the remaining contaminants from a final mill effluent following secondary and/or tertiary treatment. This approach will reduce the load on the membrane and focus the membrane separation system on removing contaminants that cannot be removed by conventional means.

While it is understood that much of the early development work must be carried out on simulated streams, at an appropriate time the “robustness” of the system should be tested in “real-life” mill process streams.

It is also recommended that previous experience with membrane separation systems be carefully reviewed (a few general references have been provided as a starting point for that purpose). While some applications (reverse osmosis, ultrafiltration, microfiltration and electrochemical membrane processes) have been commercialized, the bulk of the work has not gone beyond experimental and pilot stage. Such review should offer insights as to where development of new membrane materials can solve specific application problems and when coupled with systems improvements could lead to commercial implementation.

The development of electrochemical membrane systems and bipolar membrane electrodialysis in particular should be examined closely as it appears to be a promising technology with the potential to solve some of the problems listed in this report. Reference (4) is particularly useful. Because high capital and operating costs have limited the application of this technology, it is a technology Oak Ridge scientists should review carefully with the goal of applying superior membrane materials and process know-how to make this technology viable.

It is also recommended that opportunities to develop novel means to fractionate the components of wood be investigated.

References

1. *"Pulp Mill Process Closure: a Review of Global Technology Development and Mill Experience in the 1990s".* NCASI, Technical Bulletin No. 860, 2003.
2. *"Setting the Industry Technology Agenda",* the 2002 Forest, Wood and Paper Industry Technology Summit, TAPPI press, 2001.
3. *"Membrane Technology Applications in the Pulp and Paper Industry",* NCASI, Technical Bulletin No. 763, 1998.
4. C. Oloman, *"Electrochemical Processing for the Pulp and Paper Industry*", The Electrochemical Consultancy, England, 1996.
5. M. Pekkanen et al*,"Options to Close the Water Cycle of Pulp and Paper Mills by Using Evaporation and Condensate Reuse"*, TAPPI Minimum Effluent Mills Symposium Proceedings, TAPPI Press, 1996.
6. G. Maples et al, *"A New Process Toward Bleach Plant Closure",* Tappi Journal 77(11), 71, 1994.
7. J. R. Caron and J. A. Fleck, *"Metals Management in a Closed Kraft Mill Bleach Plant,* TAPPI Pulping Conference Proceedings, book 3, 1994.
8. S.C. Stratton and G. Maples, *"Overview of the BFR Process and Demonstration Project",* TAPPI International Environmental Conference, 1995.
9. R. Thompson et al*,"Caustic soda and sulfuric acid production from sodium sulfate by-products of chlorine dioxide generation-economics"*, TAPPI Journal, 78 (6), 127 (1995).
10. B. Reid et al,*"Retrospective of Closed-Cycle CTMP Operation"*, TAPPI Minimum Effluent Mills Symposium Proceedings, TAPPI Press, 1996.
11. L. Beaudoin et al, *"Treatment of Selected CTMP and BCTMP Effluents by Ultrafiltration"*, TAPPI Environmental Conference Proceedings, 1992.
12. C. Silva et al, *"Water Reuse in the Pulp and Paper Industry: Evaluation of Four Microfiltration Applications",* TAPPI Environmental Conference Proceedings, 1998.
13. TAPPI Minimum Effluent Mills Symposium Proceedings, TAPPI Press, 1996.
14. M. Pichon et al*,"Paper Mill Whitewater Deconcentration to Move Towards Complete Closure of Circuits"*, TAPPI Minimum Effluent Mills Symposium Proceedings, TAPPI Press, 1996.
15. O. Tardif et al*,"Membrane Biological Reactor Treatment of Recirculated Newsprint Whitewater"*, TAPPI Minimum Effluent Mills Symposium Proceedings, TAPPI Press, 1996.
16. A. Hodgson et al, *"Effect of Tertiary Coagulation and Flocculation Treatment on Effluent Quality from a Bleached Kraft Mill",* TAPPI Journal, 81(2), 166, 1998.
17. J. Dorica et al, *"Mill Studies on Closure of the Effluent Cycle in a Newsprint Mill",* TAPPI Minimum Effluent Mills Symposium Proceedings, TAPPI Press, 1996.

Appendix D: High-Priority Separation Materials R&D Needs in the Chemicals and Petrochemicals Industries

Prepared by Dr. George E. Keller II, Vice President, NewCarbon, Inc.
Under contract with ORNL for the U.S. DOE

D.1 Introduction

The purpose of this report is to present an industrial perspective on high-priority materials research needs for separations processes used in the chemical and petrochemical industries. Research needs should be limited to the ITP program scope of applied research and development, i.e. biomass alternative feedstock R&D is not in the ITP scope, and must include a major energy savings component over existing technologies. The limitation on this report to high-priority materials research is quite restrictive, since the vast fraction of the energy consumed in separation in these industries is taken up by distillation (Humphrey and Keller, 1997), and the materials research implications for distillation with respect to energy savings are modest at best.

By far the most important area for separation materials research is developing new mass-separating agents – materials such as solvents, adsorbents, absorbents, ion-exchange resins, membranes, etc. – that are added to the mixture to be separated to effect a more economical separation and/or to improve the degree of separation attainable. Processes using such agents are ubiquitous in the target industries and are even beginning to encroach to a small extent on distillation's once sacrosanct domain. This area will be discussed in some detail.

A second and quite important area for materials research is bringing heat transfer to the site of mass transfer so that the necessary heat can be supplied or removed as the mass transfer is taking place. It will be shown that if this can be done, whole new continuous separation processes will become possible with a considerable potential for energy reduction too.

Reducing the cost of oxygen production was highlighted in a previous study (Keller, et al, 1998), and even though progress has been made, more can be done profitably. Some direction for research in this area will be suggested.

This report also includes a miscellany of other membrane-material-dependent separation that may warrant research, possibly because they may be a pivotal step in a new process.

There has been an attempt here to emphasize those areas that are being under-researched considering their potential to reduce energy usage. Several other areas are being adequately researched for now, and no further major effort is suggested for them.

The field of separation-process research, development and commercialization in the chemical and petrochemical industries can be considered to have reached a mature state. It has become increasingly harder to conceive of and develop new, large, non-conventional, energy-saving separation processes to replace older processes or to make possible new routes to new products. Optimization and modeling have become characteristics of much of the research that is carried out. The problem, of course, is that the impact of such research is generally low. This report focuses away from these kinds of studies, and directs towards higher-risk materials research which, if successful, could lead to large reductions in energy usage.

D.2 Discussion

The energy consumption in the U.S. chemical process industries is of the order of five quads/yr (one quad = 10^{15} BTU) (Humphrey and Keller, 1997). Energy use to drive separation processes accounts for about 41 percent of this total, and the amount of energy consumed by distillation and its companion vapor-liquid processes, azeotropic and extractive distillation, is much larger than the energy consumption to drive all the other separation processes. Thus it would appear that reducing energy usage in distillation, especially in separation with low relative volatilities (say, 1.5 or less) or ones which operate at cryogenic or very high temperatures should be a major focus for research.

It is true that there are opportunities for reducing distillation's energy usage, but materials research presents few if any significant opportunities in this area. Rather the chief opportunities would seem to be improved process control and heat-cascading of columns, i.e., using the heat released in the condenser of one column for heating the reboiler of another column (Ho and Keller, 1987).

Improved distillation-column phase contactors, such as advanced column-packing geometries and membrane-based contactors, should be a continuing research area which could involve materials research. However even though improvements in contactors may be helpful in reducing the investment in a new column or increasing the capacity of an existing column, the energy-use-reduction implications will typically be rather small. One exception to this generalization is the case in which major reductions in pressure-drop, and therefore temperature-drop, in a column, might prove helpful in facilitating heat cascading of a series of distillation columns. But because of the low energy savings potential for materials research in distillation, research and development funding for this area should be sought elsewhere.

On the other hand, some of the largest reductions in energy usage might well come from developing new, non-distillation-based processes that could displace distillation for some of its major separations. In the following sections several possibilities along this line will be noted.

Target Separations

It is important to target classes of present-day separations which consume large amounts of energy, not only because each individual unit is energy-profligate, but also because that separation is replicated many times. Table D.1 provides a number of examples of such separations.

Table D.1 High-Energy Distillation Processes with Potential for Replacement with Lower-Energy Alternatives

- Olefin-paraffin separations: ethylene/ethane, propylene/propane, butadiene/ butenes, styrene/ethylbenzene, etc.
- Removal of organics from water where azeotropes are formed: ethanol, isopropanol, sec.-butanol, etc.
- Recovery of dilute organics from water: acetic acid, ethylene glycol, methanol, many high-boiling polar organics
- Cryogenic air separation
- Polyol separations: ethylene glycol/diethylene glycol, ethylene glycol/ propylene glycol
- Various isomer separations

Adapted from Humphrey and Keller, 1997

An expanded list is given in Humphrey and Keller (1997). It is also important to identify other classes of separation that could be indirectly important in facilitating energy savings in processes. For example, in various liquid-phase-catalyzed reactions, the removal of the products while recovering and recycling the catalyst can be a critical step when the catalyst is expensive and/or temperature-sensitive. Such catalysts can consist of highly expensive noble metal containing clusters used in Oxo and other chemistries as well as organisms for specific fermentations. This will be expanded on later.

New Solvent and Adsorbent Research

The first part of this section will deal with solvent-extraction and absorption processes, and the second part will deal with adsorption processes. Solvent extraction in many cases is characterized by relatively large equipment sizes per unit throughput compared to distillation, large solvent inventories and slow movement of the phases past each other. These characteristics place some heavy penalties on solvent extraction with respect to the costs of solvents that can be reasonably considered, as well as on investment costs. Large inventories of costly solvents can simply rule out their use for certain separations.

However some relatively new types of rotating contactors (Leonard, 1988; Leonard, R. A., et al, 1997) have been developed at Argonne National Laboratory and are being produced commercially by CINC Co. (2003). Such contactors have been in use for processing nuclear wastes for a number of years and are being proposed for a large new application (Levenson, et al, 2000; Levenson, et al, 2001). Few examples of their use in the chemical and petrochemical industries exist, however.

Although the venerable Podbielniak extractor and other such extractors represent even more compact units, they are not as scalable to large throughputs as are the rotating contactors. A company that makes contactors similar to those of CINC is Rousselet-Robatel Co. (2003).

Rotating contactors reduce the solvent inventory in the extractor by one to two orders of magnitude compared to more conventional extractors, and greatly speed up the rate of inter-phase mass transfer. These characteristics lead to a much shorter residence time in the extractor than is typical, and this in turn can lead to dramatically reduced solvent inventories, provided that the volumes of the equipment exterior to the extractor can also be reduced. A major benefit is the ability of such compact extractors to recycle the solvent many times more often per unit of time than is typical in more conventional extractors. This ability in turn markedly reduces the required solvent inventory, since that inventory is inversely related to the number of times the solvent can be recycled per unit of time.

The ability to reduce the solvent inventory means that more expensive solvents – ones heretofore ruled out because of their cost per unit volume – can now be considered if they show superior separating capabilities. A number of examples of such solvents exist. One such category consists of pi-bonding materials such as cuprous ion (Blytas, 1992) and silver ion (Keller, Marcinkowsky, et al, 1992). Solutions of these ions, both aqueous and non-aqueous, have been shown to be extremely selective in reversibly complexing olefins such as ethylene and propylene compared to their corresponding paraffins. Today these olefins are virtually universally separated by difficult distillation processes on massive scale from their corresponding paraffins, with very large expenditures of energy per pound of olefin. Therefore the economic viability of solvent extraction using pi-complexing solvents may be enhanced if the required inventories of these solvents could be substantially reduced. It is also possible that equipment-investment costs would also decline somewhat. Other unusual solvent systems for extraction based alternatives to distillation based separation might include crown ethers and their derivatives, which can act as molecular sieve cavities for certain compounds, and special agents for separating chiral mixtures of compounds. The boundaries of the possibilities for the use of relatively costly solvents for separating agents in a solvent-extraction mode are unknown at this point but probably rather wide.

The same generalization holds true for absorption, given the likelihood of being able to develop small contactors for this separation. The overall gains in absorption, however, are not likely to be as dramatic as those projected for solvent extraction.

With respect to adsorption, there is a portfolio of adsorbents that includes activated carbons, silica gels, activated aluminas, various zeolites and other molecular sieves, and a few other materials. Recently there has been some increased interest in polymeric materials such as derivatized ion-exchange resins for at least two reasons. Firstly their selectivities can typically be “tuned” chemically more easily than can selectivities of most inorganic adsorbents, and secondly these materials can be moved between adsorbing and desorbing zones without the problems of particle breakage and/or equipment erosion that arise with inorganic adsorbents. This latter feature can make it possible to

establish a cycle similar to that of a continuous absorption process, in which the solvent moves between two zones. This research area should be encouraged to the extent that it is aimed toward specific, high-energy consuming separation processes. There may also be cases in which unusual selectivities can be effected with new inorganic adsorbents, and such research should also be encouraged.

Close-Coupling of Heat Transfer and Mass Transfer

One of the truly major problems in many separation processes is the fact that in these processes considerable heat is generated when a gas or vapor is sorbed into a liquid or onto an adsorbent, and when a liquid is sorbed onto an adsorbent. Conversely considerable heat can be required to remove, or desorb, a sorbed material. In the case of sorption, the receiving phase begins to heat up, which limits the degree of sorption which can be attained. Some of that heat is also lost in the effluent stream. In the case of desorption, the sorbent begins to cool down, thereby making desorption more difficult and more energy intensive. This problem does not occur in distillation, in which components condense into the liquid phase as other components vaporize. Nor does it occur in solvent extraction, in which the passing of a liquid between two liquid phases is usually nearly devoid of heat generation or requirement. The main processes with severe heat generation and heat requirement implications are those in which sorption and desorption occur at the same place in the process but at different times (such as in most adsorptions), or those in which sorption and desorption occur at different positions (as in absorptions) in the process.

In adsorption these adverse heat effects are minimized by adsorbing only slight amounts of materials or by using a displacing agent, which desorbs as the adsorbate adsorbs and then adsorbs to help remove the adsorbate. The problem with the first strategy is that when temperature rise is used to affect desorption, and the amount of material sorbed is relatively small, then energy must be expended not only to desorb this small amount but also to heat up a large amount of sorbent and adsorber vessel. The problem with the second strategy is that considerable energy use results from the recovery, usually by distillation, of the displacing agent from both the adsorber effluent and the desorbed product.

Material-based research for new process geometries and more rapid means of transporting heat to and from adsorbing sites represents a possible step-out opportunity to develop more efficient energy use sorption processes.

The Drive Toward Continuous Processing

Chemical engineering practice seems destined to continue to evolve toward continuous separation processes, except in cases in which a given unit produces several different products serially. With respect to making separation continuous, perhaps the most refractory process is adsorption, and so it is not surprising that most of this work has gone on in recent years in this area. The problem is that the transportation of solids between sorbing and desorbing zones is quite difficult. One example

around this problem for separation of liquids is Simulated-Moving-Bed (SMB) adsorption technology. In this process the solid remains stationary but the feed, eluant and draw-off points move along the column in time (for example see Humphrey and Keller, 1997). So inside the column the process is discontinuous at any point, but the process accepts a constant feed flow and emits constant product flows, and so the rest of the unit "views" it as a continuous process. A number of very high-volume, difficult, industrially important separations now use SMB adsorption technology. It appears that both energy use reduction and investment reduction are significant factors in the increasing use of this technology. More recently there is an indication that smaller separations in the areas of pharmaceuticals, biochemicals and some specialty chemicals are SMB adsorption candidates. New and selective adsorbents and ion-exchange resins are major keys to the successful application of SMB technology to these new areas.

With respect to adsorption separation of gases, some major gains have also been made in continuous adsorption processes. The most popular type is the adsorbent wheel, which rotates between an adsorbing section and a heated desorbing section. In one version gas flows axially through monoliths containing thousands of holes onto which the adsorbent is attached. In the second and seemingly more popular version (Durr Environmental Co., 2003), the bed consists of a rotating annular section, with the flow traveling radially through monolithic structures. In their most popular forms, these processes are used for removal of trace concentrations (generally well below two weight percent) of constituents in gas streams. The adsorbed constituents, which are often pollutants in very large-volume air streams, are then concentrated typically by a factor of 10-20 in a desorbing stream which can then be sent to an incinerator, where the pollutants are burned. The incinerator heat is then used to desorb more pollutants. These processes could theoretically include both conventional and non-conventional adsorbents, but so far it appears that only conventional adsorbents – primarily activated carbon and silicalite molecular sieves – are being used with these wheels. If indeed the heat- and mass-transfer functions can be brought together in such a process as discussed in the previous section, then the continuous wheel can take on increasing numbers of separations, including bulk separations, in which the components to be adsorbed can range well above 10-20 weight percent in the feed. In such cases new adsorbent materials and adsorbent geometries may well be required. This will be a considerable task for materials research.

Separation of Oxygen from Air

Large volumes of oxygen are consumed in a wide variety of processes to produce not only a wide variety of products but also to carry out a number of other functions. Two advanced technologies have been commercialized for many years and are being continuously improved with respect to reducing investment and operating costs. The most common process is cryogenic distillation, which is carried out most commonly in a heat-integrated, double-column arrangement. This process can recover oxygen and nitrogen simultaneously. The second process is pressure-swing adsorption, which can recover only oxygen or nitrogen as relatively pure streams, but not both from the same

process at the same time. Polymer membrane-based processes are also used commercially for nitrogen production, but a widely used, economical process for oxygen production has not been forthcoming.

A large amount of research, development and demonstration for high-temperature (>800°C) air separation is presently being funded by DOE's National Energy Technology Laboratory (NETL). This work is being carried out primarily and independently by Praxair and Air Products and Chemicals Corp., and is part of the Integrated Gasification Combined Cycle (IGCC) project for producing power and hydrogen from coal with virtually no emissions including carbon dioxide, which will be sequestered. Both companies have apparently made remarkable progress and now have processes which have about one-third lower costs than cryogenic distillation for producing high-purity oxygen. However the full extent of this lower cost is only realized when the oxygen-separation process is integrated with a gas turbine system and with other high-temperature operations. Both the Praxair and Air Products processes are based on oxygen permeable ceramic membranes. It appears that this work is progressing well and so far has been technologically and economically very successful. Both processes are on schedule to start up a multi-ton/day facility by the 2006-2007 timeframe. Information on and contacts for both processes may be found on the NETL website (NETL, 2003).

There is always the need to reduce the cost of oxygen, but the barrier for being able to do so is even higher now. Optimization and modeling work on incremental improvements to existing processes simply will not suffice. Rather only "out-of-the-box" ideas should be researched. Additionally careful attention must be paid in these projects as to how the process can be embedded into various oxygen-consuming processes, where applicable, to attain maximum energy use reduction.

Membrane Separation

Membranes still constitute an area for useful research, although the boundaries for useful work with respect to energy use reduction are probably narrowing. The inorganic membrane technology, developed initially at the K-25 facility at Oak Ridge (for example see Fain and Roettger, 1994) and recently transferred to the Oak Ridge National Laboratory, could show exciting applications in gas component separations (molecular sieving), high temperature gas particulate separations, and liquid separations including the range from reverse osmosis to microfiltration. Work on this technology should be supported if the secrecy classification hurdles surrounding it can be resolved. Apparently NETL (2003) is also supporting work on inorganic membrane-based, high temperature separation of hydrogen, and this work should be monitored for possible fall-out opportunities. Work on hydrogen recovery by palladium membranes has been researched and even commercialized over a period of 50 or so years and does not show any economic advantages over alternative processes. Therefore no work on palladium membranes is recommended.

A second membrane area to be supported regards the separation of soluble catalysts from liquid reaction product mixes. These catalysts and in some cases their accompanying ligands are quite expensive and must be recycled in very high efficiency to the reactor for a given process to be economical. On the other hand these catalysts in a number of cases produce chemical selectivities such that product purification energy can be reduced markedly. An outstanding example is the Oxo technology for forming butyraldehyde and other aldehydes from olefins and synthesis gas. This technology outdated the previous cobalt-based, high-pressure technology for these products. But more is yet to come. For example it is becoming possible to design catalyst/ligand combinations that will produce a virtually pure chiral compound instead of the usual equilibrium mixture of these compounds (Babin and Whiteker, 1996). Considering the high energy and investment costs attending separating equilibrium chiral compound mixtures, effecting the efficient recovery and recycle of these new catalysts and ligands could unlock the door for commercializing a number of low-energy-use processes. As the science of soluble-catalyst/ligand chemistry progresses it can confidently be predicted that (1) the number of applications for them will increase, and (2) these materials will continue to be very expensive. Membranes offer an excellent means for recovering and recycling these valuable catalyst systems (Bryant, et al, 1997). An additional advantage for membranes is that the separation can be carried out at relatively low temperatures and thus protect these often temperature-sensitive systems.

Polymer gas-separation membranes are fairly well-developed for a number of separations, and major energy saving opportunities with regards to them, probably few and far between.

D.3 Proposed Emphasis Areas for Separation Technology R&D

From the analysis presented here Table D.2 was constructed to serve as a summary of what appear to be the prime areas for separation research with a materials component to it for the chemical and petrochemical industries.

Table D.2 Proposed Emphasis Areas for Separation Technology R&D and Their Potential Impact on Energy Use

Area	Description	Relative Energy-Use Impact
Replacement of distillation processes	substitution of improved solvent-extraction and other processes for difficult distillations	very high
Close coupling of heat and mass transfer	reduction of energy requirements for adsoption and absorption	medium
Continuous processes: liquid feeds	development of new sorbent materials for new separations	medium
Continuous processes: gas feeds	development of new sorbent materials for temperature-swing bulk separations	medium
Air separation	continued development of alternatives to cryogenic distillation	high
Inorganic membranes	a variety of applications to gas and liquid separations	medium
Membranes for catalyst recycle	separation from products and recycle of expensive soluble catalysts	medium

The following questions are also important to be answered by researchers proposing to work in these areas:

- What are the projected energy savings for a typical application if the project goals are met? These calculations should be based on the best information on both the existing and projected processes.
- How many applications are likely to be there, and what might be the total energy use reduction?
- Does the projected technological improvement "embed" itself with the overall process unit in such a way that additional energy use savings are possible?

It should also be remembered that there are a number of caveats that speak to most of the areas recommended for research in this report.

D.4 Conclusions

Again it must be stressed that separation technology in the chemical and petrochemical industries has become overall rather mature, which means that significant energy reduction gains will be increasingly harder to bring about in the future. Further as the new, high-temperature oxygen purification technology shows, the energy and overall economic savings for a separation process can be a strong function of how that process is embedded energy-wise and investment-wise into the

overall process which it serves. More and more energy use reduction calculations involving just a separation process in and of itself and not in the context of the overall process, where applicable, will increasingly be found to be misleading.

The most fruitful area for studying energy use reduction will be the replacement of high-energy-use, vapor-liquid-based separations by alternative, lower-energy-use processes, including primarily solvent extraction and secondarily adsorption. For solvent extraction, equipment miniaturization and cycle time decreases will make possible the use of higher priced but more selective mass-separating agents because of the ability to substantially reduce costly solvent inventories.

Further research in the efficient and rapid removal of heat from sorbing sections and the delivery of heat to desorbing sections of adsorption and absorption processes will bring down the costs of these processes as well as extend their use to performing bulk separations. Investment and energy-use reductions should be possible if this considerable problem can be solved creatively. The solution of this problem would also facilitate the development of continuous versions of these presently semi-continuous processes, with the expectation that such processes would bring about even further energy savings. Materials research will play a key role in bringing about this new generation of sorption processes.

Support for membrane research is recommended in two areas. The first involves the impressive inorganic membrane work at Oak Ridge, in which membranes with molecular sieving capabilities for gases as well as with larger pores for other applications have been developed. These membranes would appear to have a widespread portfolio of uses and opportunities for energy use reduction, and this work should be supported if the problems involved with secrecy classification can be resolved.

The second area for support is the development of membranes for the liquid phase separation of complex and costly catalysts from the products of their reactions. The economics of such processes require the highly efficient recovery and recycle of such catalysts. The energy use savings stem from the fact that such catalysts, because of their highly selective nature, can produce a product stream requiring much less separation energy than product streams from processes using less selective catalysts.

References

1. Babin, J. E., and G. T. Whiteker, "Asymmetric Synthesis," U. S. Patent 5,491,266, 1996.
2. Bryant, D. R., et al, "Membrane Separation," U. S. Patent 5,681,473, 1997.
3. Blytas, G. C., "Separation of Unsaturates by Complexing with Nonaqueous Solutions of Cuprous Salts," in Li, N. N., and J. M. Calo (editors), Separation and Purification Technology, pp. 19-58, Marcel Dekker, Inc., New York, 1992.
4. CINC Corp. For literature, see www.cinc-co.com. 2003.
5. Durr Environmental Co. For literature, see www.durrenvironmental.com. 2003.
6. Fain, D. E., and G. E. Roettger, "Hydrogen Production Using Inorganic Membranes," Conference 94051-3, ORNL/FMP-94/1, 51, NTIS, Springfield, VA, 1994.
7. Ho, F.-G., and G. E. Keller, "Process Integration," in Liu, Y. A., McGee, H. A., and W. R. Epperly (editors), Recent Developments in Chemical Process and Plant Design, pp. 101-126, John Wiley & Sons, New York, 1987.
8. Humphrey, J. L., and G. E. Keller, Separation Process Technology, McGraw-Hill, New York, 1997.
9. Keller, G. E., et al, Separation Technologies for the Industries of the Future, National Materials Advisory Board, Commission on Engineering and Technical Systems, National Research Council, Publication NMAB-487-3, National Academy Press, Washington, DC, 1998.
10. Keller, G. E., Marcinkowsky, A. E., Verma, S. K., and K. D. Williamson, "Olefin Recovery and Purification via Silver Complexing," in Li, N. N., and J. M. Calo (editors), Separation and Purification Technology, pp. 59-83, Marcel Dekker, Inc., New York, 1992.
11. Leonard, R. A., "Recent Advances in Centrifugal Contactor Design," Separation Science and Technology, 23(12&13), 1473-1487 (1988).
12. Leonard, R. A., et al, "Centrifugal Contactors for Laboratory-Scale Solvent Extraction Tests," Separation Science and Technology, 23(1-4), 193-210 (1997).
13. Levenson, M., et al, Alternatives for High-Level Waste Salt Processing at the Savannah River Site, Board on Radioactive Waste Management and Board on Chemical Sciences and Technology, National Research Council, National Academy Press, Washington, DC, 2000.
14. Levenson, M., et al, Research and Development on a Salt Processing Alternative for High-Level Waste at the Savannah River Site, Board on Radioactive Waste Management and Board on Chemical Sciences and Technology, National Research Council, National Academy Press, Washington, DC, 2001.
15. NETL. See www.netl.doe.gov. Upon accessing the site, click on Technologies in the left-hand column. Then click on Gasification Technologies on the next page, then Gas Separation on the left-hand column of the next page, and then click on the particular separation of interest on the next page. 2003.
16. Rousselet-Robatel Company. For literature, see www.rousselet-robatel.com. 2003.

Appendix E: High-Priority Materials R&D Needs Identified by the Chemicals Industries

Prepared by Vision2020 Steering Team
for the U.S. DOE ITP
April – May 2003

The highest priority materials research needs identified for the chemical and petrochemical industries are summarized in Table E.1 and discussed thereafter.

Table E.1High Priority Materials R&D Needs Identified by the Chemical Industry

	R&D Areas	R&D Need
Membranes	Polymer Membranes	Improved durability, selectivity, and resistance to fouling.
	Inorganic Membranes	Improved durability and selectivity (Note: DOE Fossil Energy is funding research in ceramic area.).
	Composite Membranes	Improved durability, selectivity, and resistance to fouling; improved functionality for composite polymer membranes.
Polymers	Polymer Aging	Understand effects of oxidation, mechanical stress, and environmental degradation; conduct accelerated age testing.
	Polymer Dynamics	Fill gap in scales between molecular & continuum and understand connection between kinetics & thermodynamics at mesoscopic scale.
	Polymer Architecture Control	Create materials with improved properties from monomers available at large scale: synthesis (polymerization catalysts, alternative monomers), modeling, polymer processing technologies.
	Coatings	Need low VOC and/or solventless, multi-functional, self-healing materials; improved durability, resistance, weatherability, and anti-fouling.
	Materials for Multiple Driving Force & Hybrid Systems	Integrated materials/reactor designs to drive equilibrium reactions at 200°-700°C to overcome equilibrium limitations on rate & purity; emphasize applications for distillation.

Table E.1High Priority Materials R&D Needs Identified by the Chemical Industry (continued)

R&D Areas	R&D Need
Materials for Separations for Large-Scale Dilute Streams	Enhanced selectivity, yield, fouling resistance. Applications include water purification, air separations, CO_2 for fuel gas, light hydrocarbons, hydrogen economy.
Nanomaterials	Properties retention at high temperatures, corrosion resistance, light weight, and have both flexibility and strength. Develop for barriers, coatings, boilers, turbine applications.
Modeling	Surface interfaces for catalysis and adhesion; Kinetic/ thermodynamic control of separations.

Improved separation technology is needed for existing industrial processes, as well as for supporting the development of new process chemistries, catalysts, bioprocesses, and reaction engineering. For example, new chemical processes based on new reaction media and/or new feed materials will require innovative reactor designs with new separation techniques, both of which require new materials technology. Materials R&D will be required to develop advanced reactor concepts that will incorporate catalysts, membranes, etc. into the reactor. An integrated research approach will be required to optimize the catalytic and/or separation techniques in the reactor design and the overall operation.

New breakthrough advanced material concepts are needed to meet these separation needs. Separation research should be focused on developments robust enough to handle process conditions found in reaction systems of commercial interest. High priority research applications for the chemical industry include (1) separations of valuable components from dilute liquid and gaseous mixtures, e.g. olefins from dilute off-gas streams, and (2) separations of similar compounds within a given chemical class, e.g. low molecular weight organic acids, organic esters, etc. New technical approaches are needed to achieve high selectivity, flux rates, and reliability at low costs. There is also a need for the separation or purification of certain chemicals to very high levels of purity.

Membranes

In general membrane research should be focused on membrane materials that are useful for a variety of applications and which will result in major energy-saving opportunities. Important properties for emerging membrane materials include durability, selectivity, resistance to fouling, impact strength, flexibility, thermal stability, and transport properties. Promising areas of research include:

- Polymer membranes: The industry is divided on the opportunities in this area. Some feel that there could be significant contribution to the industry if material was found that has improved selectivity and flux. Others feel that polymer membranes are fairly well developed and major industrial profitable applications and energy saving opportunities will be few in the future.

- Inorganic membranes: Potential opportunities include ceramic membranes, nanostructured membranes, and zeolite membranes. The DOE Fossil Energy program is funding significant amounts of research in the development of ceramic membranes for applications in fuel cells, hydrogen separations, and oxygen separations. Development in this area may be sufficiently funded.
- Polymer-inorganic composite membranes**:** Research should focus on tunable synthesis and fabrication of low-cost membrane modules for high-selectivity applications.

Integrated and Hybrid Systems

In many cases, new hybrid separation processes are likely to be the key breakthrough technologies needed for the future. For example, the ultimate key to competitive bioprocessing will likely be to optimize biocatalysis and separation in an integrated process, simultaneously enhancing both selectivity and flux while reducing impurities and fouling. This will require integrated R&D in both biocatalysts and separation processes such as membranes, ion exchange, extractants, and selective adsorbents. Similarly hybrid systems will be needed to economically replace energy intensive unit operations, such as distillation. Material research is needed to support design of new hybrid systems (such as field-enhanced filtration and distillation, reactive extraction and distillation, and membrane reactors).

Research of interest includes separation methods that use multiple driving forces:

- processes in which a naturally occurring driving force for a specific operation is enhanced by an intervention that changes the system thermodynamics
- coupling of two or more separation techniques (combined membrane separation and distillation; affinity-based adsorbent separation; and electrically aided separation)
- separation associated with chemical reaction, i.e., methods that combine reaction and separation in one process step (reactive metal complex sorbents and chemically facilitated transport membranes; coupled chemical synthesis and separations processes; membrane reactors; and electrochemical methods of separation)

Separations from Dilute Streams

Methods for separating components from large-scale dilute streams require improvements in enhanced selectivity, yield, and fouling resistance. Gas separation may require technology development for adsorption, high-selectivity membranes, inorganic membranes, and advanced-particle-capture for the removal of submicron and micron-sized particles. Methods for separating components from dilute aqueous streams may include reactive metal complex sorbents, reducing agents, air oxidation combined with absorption, membranes, steam and air stripping, electrically facilitated separation, destructive-oxidation techniques, ion exchange, and crystallization.

Polymers

High-priority research areas for polymeric material development include the ability to monitor and link process conditions to product properties (at the micro-, meso-, and macro-scales), and to produce polymers which can be disassembled for recovery/recycle. For polymer dynamics, there is a need to fill gaps in scales between molecular and continuum, and to understand connection between kinetics and thermodynamics at the mesoscopic scale. There is also a need to understand polymer aging, including oxidation, mechanical stress impacts, environmental degradation, accelerated age testing, etc. Controlling polymer architecture should be investigated to create materials with improved properties from monomers which are either currently available on large scale, or which could be manufactured cheaply at scale given market demand. The key objective is to acquire the ability to displace more-expensive high-performance materials with ones that are cheaper but more cleverly put together. The types of projects this area should address include synthesis (both polymerization catalysts and alternative monomers), modeling, and polymer processing technology.

Coatings

Advances in coatings offer promise for improving separation processes. Research is needed to improve properties, such as low VOC and/or solventless, multi-functional, self-healing, durable, resistant and weatherable, and anti-fouling.

Modeling

There is a need to understand phase separation to optimize yield, reduce cycle time, etc. Also included here is a further elaboration of phase transfer catalysis used in separations processes. Understanding of surface interfaces for catalysis and adhesion, and kinetic/thermodynamic control of separation is also needed.

Nanomaterials

Nanotechnology is an emerging technology which has focused on discovery research to date. As the technology transitions into applied R&D there will be many opportunities for materials developed to support separations needs. Research should be focused on fundamentals, synthesis, characterization, modeling, manufacturing and standards for solving important pre-competitive industrial problems that can be leveraged in many applications. Research programs should require an a priori focus on the requirements of manufacturing and integration into devices, applications, and processes. Integrated, multidisciplinary research teams with expertise ranging from fundamentals to applications will be required to overcome the challenges of predictive nanodesign and accelerating commercialization. Nanomaterials research needed to support separation in multiple industries, such as the chemical industry, includes development of:

- high selectivity, high capacity sorbents
- superior barriers with novel properties such as molecular recognition and low permeability to oxygen
- coatings with superior properties, e.g. low VOC and/or solventless, multi-functional, self-healing, durable, resistant and weatherable, anti-fouling; energy efficient, thin films
- sensor-bearing "smart" materials
- resins (strong, fire resistant, electrically and thermally conducting)

Emerging Technologies

Vision2020 is just beginning efforts to examine the potential of ionic liquids for applications in the chemical and petrochemical industries. Over the next year opportunities for collaborative research in ionic liquid materials to advance both separation and reactions will be investigated. This may be a future area for materials research.