APPENDIX 11 – Chevrolet S-10 Service Bulletins

S10 ELECTRIC

Customer Satisfaction Improvement Program

Symptom	Vehicles Involved	Corrective Action	Bulletin Status
Repair all leaky coolant recovery bottles			
1. Fuel fired heater system recovery bottle leak	All 1997 & 1998	Repair leaky bottle with plug available from Bowman Products @ 800-927-3555 3/8" vacuum plug part no. 6718 GM 27004546	**Bulletin No. 86-11-08 SPA T-98-15** Cap 27004546 Clamp 14064656 Cap available through SPO aprox 5/15/98
2. Propulsion system recovery bottle caps leak	All 1997 & 1998 prior to H6W8163772 414 Vehicles	Repair kit with new bottle has been released parts to be available aprox 3/1/98	**Bulletin sent out 5/98** **Bulletin No. 86-62-09 SPA T-98-05** On 2-1-98 parts available aprox. 3/1/98 On 3/2/98 parts available aprox 3/18/98 1997 & 1998 Serv Kit 27004233 (bottle, brkt, fstnrs, fluid) 40 kits available aprox 4/15/98
Reprogram Vehicle Controllers			
1. Won't charge below 41° F (5° C). May have DTC's 267 & 268.	All 98 prior to H4W8138496 173 Vehicles	Reprogram BPCM calibration	**Bulletin No. 86-64-10** Letter & Software calibration diskette sent out 11/97 STG Disc. 98 - 3
2. SOC Gage toggles from empty to partial reading	All 98	BPCM experiences intermittent running resets DTC 302 Reprogram BPCM	**Bulletin 86-64-09** Being investigated 1/18/98 Fix has been identified 2/1/98 Program to be available on STG Disc 98-11
3. Low Range - Pack not charged to 100%	All 97 & 98	Reprogram BPCM to increase frequency of 100% charge event.	**Bulletin No. 86-64-09** Decision to change made on 3-25-98 Program to be available on Disc 98-11
4. Low Range Customers driving performance based on SOC gage indication results in low range (SOC Gage calibration)	All 97 & 98	Reprogram BPCM calibration turning Bat Life on @ 7% user SOC (1/2 "Red" mark) & Serv Now on @ 0% user ("E") (SEE ITEM #12)	**Bulletin No. 86-64-09** Decision to change made on 3-16-98 Program to be available on STG Disc 98-11

S10 ELECTRIC

Customer Satisfaction Improvement Program

Symptom	Vehicles Involved	Corrective Action	Bulletin Status
Repair all leaky coolant recovery bottles			
1. Fuel fired heater system recovery bottle leak	All 1997 & 1998	Repair leaky bottle with plug available from Bowman Products @ 800-927-3555 3/8" vacuum plug part no. 6718 GM 27004546	**Bulletin No. 86-11-08 SPA T-98-15** Cap 27004546 Clamp 14064656 Cap available through SPO aprox 5/15/98
2. Propulsion system recovery bottle caps leak	All 1997 & 1998 prior to H6W8163772 414 Vehicles	Repair kit with new bottle has been released parts to be available aprox 3/1/98	**Bulletin sent out 5/98** **Bulletin No. 86-62-09 SPA T-98-05** On 2-1-98 parts available aprox. 3/1/98 On 3/2/98 parts available aprox 3/18/98 1997 & 1998 Serv Kit 27004233 (bottle, brkt, fstnrs, fluid) 40 kits available aprox 4/15/98
Reprogram Vehicle Controllers			
1. Won't charge below 41° F (5° C). May have DTC's 267 & 268.	All 98 prior to H4W8138496 173 Vehicles	Reprogram BPCM calibration	**Bulletin No. 86-64-10** Letter & Software calibration diskette sent out 11/97 STG Disc. 98 - 3
2. SOC Gage toggles from empty to partial reading	All 98	BPCM experiences intermittent running resets DTC 302 Reprogram BPCM	**Bulletin 86-64-09** Being investigated 1/18/98 Fix has been identified 2/1/98 Program to be available on STG Disc 98-11
3. Low Range - Pack not charged to 100%	All 97 & 98	Reprogram BPCM to increase frequency of 100% charge event.	**Bulletin No. 86-64-09** Decision to change made on 3-25-98 Program to be available on Disc 98-11
4. Low Range Customers driving performance based on SOC gage indication results in low range (SOC Gage calibration)	All 97 & 98	Reprogram BPCM calibration turning Bat Life on @ 7% user SOC (1/2 "Red" mark) & Serv Now on @ 0% user ("E") (SEE ITEM #12)	**Bulletin No. 86-64-09** Decision to change made on 3-16-98 Program to be available on STG Disc 98-11

Central Office
Chevrolet Motor Division
General Motors Corporation
30007 Van Dyke Avenue, Warren, Michigan 48090-9065

CHEVROLET
Geo

DRAFT 3

Dear Chevrolet Electric Truck Customer,

Thank you for purchasing a Chevrolet S10 Electric Truck. You belong to an important group of businesses and government agencies that are taking an active part in advancing new technology and developing practical applications for that technology.

At Chevrolet we understand you may have concerns regarding battery pack charging, vehicle range and reliability of the electric truck. Since November of 1997 we have published several Dealer Technical Service Bulletins for various issues. However, we have no assurance that all vehicles have received the latest upgrades. The following issues have technical bulletins published:

- Coolant leaks from the propulsion system or fuel fired heater system.
- Vehicle won't charge below 41° F
- State of charge gauge toggles/calibration.
- Cruise control inoperative.
- Reduced vehicle range when charged between 31° F to 37° F.

In addition to the above issues, there is a new battery pack discharge test to identify any sub-standard modules in the battery pack. Replacement of those modules will restore the maximum potential range for a fully charged battery pack.

If you have any of these concerns, we invite you to have your vehicle(s) inspected at your Chevrolet Electric Vehicle Dealer. This will be done at no charge to you and all applicable upgrades will be made to your vehicle(s). Please contact your Chevrolet Electric Vehicle dealer at your convenience to schedule a service date.

We are sorry for any inconvenience you have experienced and hope you take this opportunity for us to resolve any issues you have with your electric vehicle(s).

Sincerely,

Chevrolet Motor Division
General Motors Corporation

File In Section: 1 - HVAC
Bulletin No.: 86-12-09
Date: June, 1998

Service Bulletin

INFORMATION

Subject: Replacing Refrigerant Label

Models: 1997-98 Chevrolet S-10 Electric Truck

On 1997-98 S-10 Electric Trucks, the existing refrigerant label on the evaporator and blower motor assembly shows an incorrect refrigerant oil part number. The correct refrigerant oil part number is 27002486.

Notice: Using the incorrect oil for A/C system repair will damage the refrigerant system.

Replace the existing refrigerant label, GM P/N 52474699, with a new label on the evaporator and blower motor housing. Use the part number listed below. Use the following Service Procedure in order to replace the label:

Service Procedure

1. Remove the old label from the accumulator, if equipped. Use a utility knife or remove improper refrigerant specification wording from the label (Figure 1).
2. Remove the existing refrigerant label, GM P/N 52474699, from the evaporator and blower assembly.
3. Clean the label surface area on the evaporator and blower motor assembly before affixing the label.
4. Affix the new label on the blower motor housing. Position the label so that the label can be read from the front of the vehicle (Figures 2, 3).

Parts Information

P/N	Description	Qty
52481319	Label, Refrigerant Oil	1

Parts are currently available from GMSPO.

Warranty Information

For vehicles repaired under warranty, use:

Labor Operation	Description	Labor Time
R0110	Label Replacement	0.2 hr

Important: Labor operation is coded to base vehicle coverage in the warranty system.

Figure 1 - Accumulator Label Location

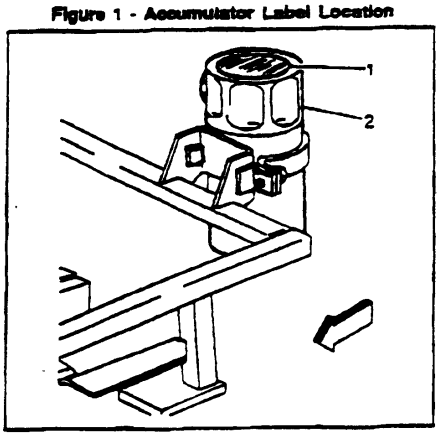

Legend

1. Accumulator Label
2. Accumulator Assembly

Copyright 1998 General Motors Corporation. All Rights Reserved.

Figure 2 - Refrigerant Label

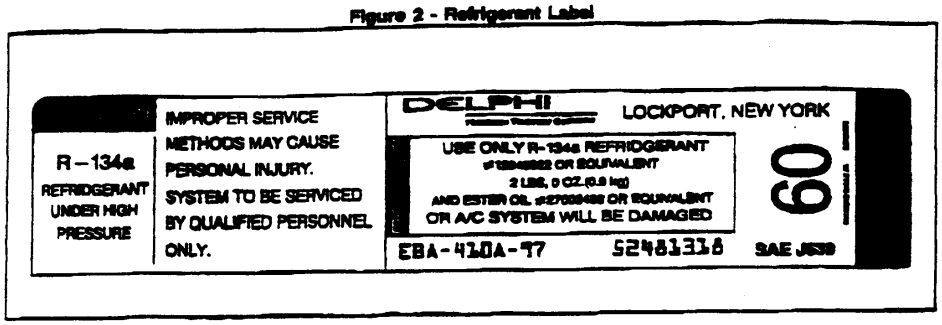

Figure 3 - Applying New Refrigerant Label on Blower Module Assembly

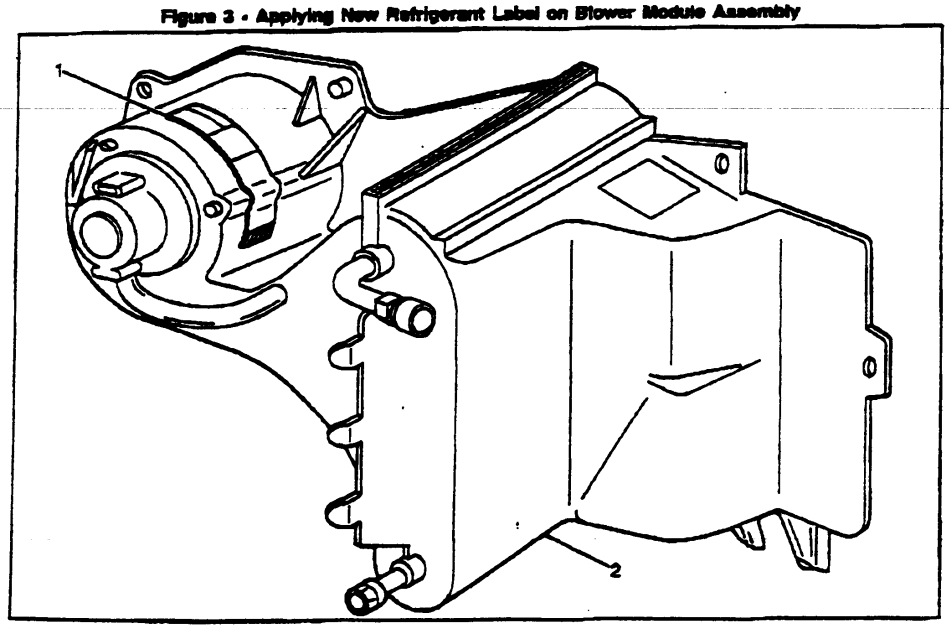

Legend

1. New Label Location
2. A/C Evaporator and Blower Module Assembly

All bulletins are intended for use by professional technicians. NOT a "do-it-yourself." They are written to inform these technicians of conditions that may occur on some vehicles, or to provide information that could assist in the proper service of a vehicle. Properly trained technicians have the equipment, tools, safety instructions, and know-how to do a job properly and safely. If a condition is described, DO NOT assume that the bulletin applies to your vehicle, or that your vehicle will have that condition. See your GM Dealer for information on whether your vehicle may benefit from the information.

WE SUPPORT VOLUNTARY TECHNICIAN CERTIFICATION

Warranty Information

For vehicles repaired under warranty, use:

Labor Operation	Description	Labor Time
D2223	Module Assembly, Blower Motor and A/C Compressor Control - Replace	0.4 hr
D3290	Charge Receptacle Coolant Valve - Remove / Install Elbow	0.3 hr

Important: Labor operation is coded to base vehicle coverage in the warranty system.

Figures: 05
Captions:
Fig. 1 - HTCM Fastening
Fig. 2 - Heater Coolant Recovery Tank
Fig. 3 - HTCM Location
Fig. 4 - Charge Receptacle Coolant Valve
Fig. 5 - Coolant Hose Connector

*****DISCLAIMER*****

Copyright 1998 General Motors Corporation. All Rights Reserved.

PRELIMINARY

3. Reinstall the floor mat.

4. On 1998 trucks, reinstall the seat. Refer to Seat Removal in the Body section of the 1998 S-10 Electric Truck Service Manual.

Coolant Hose Connector (Elbow) Installation

Important: Only do this procedure if the truck is equipped with a charge receptacle coolant valve.

1. Remove the auxiliary heater coolant recovery tank and place the tank aside (Figure 2).

2. Using Heater Hose Clamp Tool J 38543, or equivalent, clamp off both hoses that connect to the charge receptacle coolant valve.

3. Using Hose Clamp Pliers J 38185, or equivalent, slide the coolant hose clamps back from the charge receptacle coolant valve and disconnect the hoses.

4. Remove the three 7 mm retaining screws from the charge receptacle coolant valve.

5. Remove and discard the valve (Figure 4).

6. Install the coolant hose connector and reinstall the coolant hose clamps (Figure 5).

7. Remove the hose clamp tools from the coolant hoses.

8. Using electrical tape, cover the harness connector for the charge receptacle coolant valve.

9. Install the auxiliary heater coolant recovery tank.

10. Turn on the vehicle for 2 minutes in order to circulate the coolant through the system. Add coolant, P/N 12378390, to the recovery tank if necessary.

Parts Information

P/N	Description	Qty
27004713	Module Kit, Blo Mtr & A/C CMPR Cont (1997 HTCM)	1
27004714	Module Kit, Blo Mtr & A/C CMPR Cont (1998 HTCM)	1
12378390	ELECTRA-COOL Coolant	1

Parts are expected to be available.....

PRELIMINARY

File In Section: 1 - HVAC

Bulletin No.: ~~86-11-09~~ 86-64-12

Date: June, 1998

Service Bulletin

PRELIMINARY

Subject: **Reduced Range or Disabled Charging (Replace HVAC Thermal Control Module (HTCM). Install Hose Connector/Elbow)**

Models: **1997-98 Chevrolet S-10 Electric Truck**

Condition

Some owners may comment about either of the following conditions:

1. Reduced vehicle range
2. Charging disabled if charged between -1 to 3°C (31 to 37°F)
3. Charging disabled
4. Charge receptacle overheating

Cause

The old HTCM software and calibration may not be adequate for some ambient temperature conditions encountered during customer use and vehicle service. The charge port may overheat due to the lack of coolant to the charge port.

Correction

Replace the HTCM and delete the charge receptacle coolant valve. On trucks equipped with a charge receptacle coolant valve, install a hose connector (elbow). Use the part number listed below. Use the following Service Procedure.

Service Procedure

HTCM Replacement

1. Pull back the floor mat in order to expose the HTCM. Disconnect both of the HTCM connectors (Figure 3).

   Important: On 1998 trucks, remove the seat in order to access the HTCM. Refer to Seat Removal in the Body section of the 1998 S-10 Electric Truck Service Manual.

2. Apply a hook and loom fastener to the new HTCM in the same locations as the previous HTCM. Connect both connectors to the new HTCM and press the HTCM firmly into the hook and loom fastener on the floor (Figure 1).

File In Section: 1 - HVAC

Bulletin No.: ~~86-11-09~~ 86-64-12

Date: June, 1998

Service Bulletin

PRELIMINARY

Subject: Reduced Range or Disabled Charging (Replace HVAC Thermal Control Module (HTCM). Install Hose Connector/Elbow)

Models: 1997-98 Chevrolet S-10 Electric Truck

Condition

Some owners may comment about either of the following conditions:

1. Reduced vehicle range
2. Charging disabled if charged between -1 to 3°C (31 to 37°F)
3. Charging disabled
4. Charge receptacle overheating

Cause

The old HTCM software and calibration may not be adequate for some ambient temperature conditions encountered during customer use and vehicle service. The charge port may overheat due to the lack of coolant to the charge port.

Correction

Replace the HTCM and delete the charge receptacle coolant valve. On trucks equipped with a charge receptacle coolant valve, install a hose connector (elbow). Use the part number listed below. Use the following Service Procedure.

Service Procedure

HTCM Replacement

1. Pull back the floor mat in order to expose the HTCM. Disconnect both of the HTCM connectors (Figure 3).

   Important: On 1998 trucks, remove the seat in order to access the HTCM. Refer to Seat Removal in the Body section of the 1998 S-10 Electric Truck Service Manual.

2. Apply a hook and loom fastener to the new HTCM in the same locations as the previous HTCM. Connect both connectors to the new HTCM and press the HTCM firmly into the hook and loom fastener on the floor (Figure 1).

File In Section: 6 - Engine
Bulletin No.: 76-64-06
Date: January, 1998

Service Bulletin

Subject: Truck Will not Move, Cruise Control Inoperative, Service Now Light On, DTCs 5, 6, 74 (Reprogram DMCM)

Model: 1997 Chevrolet S-10 Electric Truck

Condition

Some owners may report the truck will not move or the Cruise Control will not operate and/or the Service Now Light is on. Diagnosis may reveal Diagnostic Trouble Codes (DTCs) 5, 6 and/or 74 are stored.

Cause

DMCM calibration fault.

Correction

Follow the Strategy Based Diagnostics and published procedures for the specific symptom and DTCs. If diagnosis does not reveal a cause, reprogram the DMCM with calibration file number 09351849.

When the reprogramming process is complete:

1. Turn off the vehicle for at least 10 seconds.
2. Start the vehicle and turn on the Air Conditioning with the fan on the high speed setting.
3. Turn off the vehicle with the A/C and fan left on and wait at least 10 seconds.
4. Road test vehicle and confirm that the Cruise Control now operates normally.

Important: This new calibration is not available from GMSPO. It is available starting with the 1997 Techline CD ROM Disc #19 update.

Warranty Information

For vehicles repaired under warranty, use:

Labor Operation	Description	Labor Time
J6355	Reprogramming	Use Published Labor Operation Time

Important: Labor operation is coded to base vehicle coverage in the warranty system.

GM bulletins are intended for use by professional technicians. NOT all "do-it-yourselfer." They are written to inform these technicians of conditions that may occur on some vehicles, or to provide information that could assist in the proper service of a vehicle. Properly trained technicians have the equipment, tools, safety instructions, and know-how to do a job properly and safely. If a condition is described, DO NOT assume that the bulletin applies to your vehicle, or that your vehicle will have that condition. See your GM Dealer for information on whether your vehicle may benefit from the information.

WE SUPPORT VOLUNTARY TECHNICIAN CERTIFICATION

Copyright 1998 General Motors Corporation. All Rights Reserved.

When the reprogramming process is complete. do the following steps:

1. Turn off the vehicle for at least 60 seconds.
2. Start the vehicle and clear the DTCs in the BPCM.
3. Place the vehicle on charge and verify that the vehicle charges until the Charger displays FULL - COMPLETE (up to 8 hrs).

The Service Programming System (SPS) will not allow incorrect software programming or incorrect calibration changes. For instructions and information on this procedure, refer to the latest Techline information on re-programming or flashing procedures.

Warranty Information

For vehicles repaired under warranty, use:

Labor Operation	Description	Labor Time
J6355	Reprogramming	Use Published Labor Operation Time

Important: Labor operation is coded to base vehicle coverage in the warranty system.

Figures: 00

Attachments: 00

*****DISCLAIMER*****

Copyright 1998 General Motors Corporation.

File In Section 6 - Engine
Bulletin No.: 86-64-09
Date: May, 1998

Service Bulletin

Subject: Reduced Vehicle Range, State of Charge Gauge Sweeps/Swings

Models: 1997-98 Chevrolet S-10 Electric Truck
with VIN H (RPO LN1)

Condition
Some owners may report about reduced vehicle range with no change in driving habits or that the state of charge (SOC) gauge sweeps/swings. Diagnosis may reveal diagnostic trouble code (DTC) 302 is stored.

Cause
The charging strategy does not allow the battery pack to charge to 100% every time the vehicle is placed on charge even though the charger displays FULL - COMPLETE.

BPCM calibration fault.

Correction
Verify that BPCM DTC 311 or drive motor control module (DMCM) DTC 104 is not present. You must diagnose BPCM DTC 311 or DMCM DTC 104 first. Refer to the appropriate DTC diagnostic information.

Follow the Strategy Based Diagnostics and published procedures for the specific symptom and DTCs. If diagnosis does not reveal a cause, reprogram the BPCM using the following information. The Battery Pack P/N is located on the left side of the battery pack case.

Model Year	Battery Pack Assembly Part #	New BPCM Software ID #	New BPCM Software Part #
1997	19010530	97620001	09364989
1998	27004022	98620001	09360589
1998	27004041	98620021	09357549

new software will allow 100% charge every time the vehicle is placed on charge.
new software calibration will cause an increase in charge times.

Service Procedure

Service Bulletin

File In Section 6 - Engine
Bulletin No.: 86-64-10
Date: May, 1998

Subject: Vehicle Will Not Charge, "Check Vehicle" Displayed on Charger.

Models: 1998 Chevrolet S-10 Electric Truck
Built Prior to, and including, VIN Breakpoint
1GCDE14H4W8138319 (VIN H - RPO LN1)

Condition
Some owners may report that the truck will not charge in ambient air temperature conditions below 5°C (41°F). Diagnosis may reveal diagnostic trouble codes (DTCs) 267 and 268 are stored.

Cause
BPCM calibration fault.

Correction
Follow the Strategy Based Diagnostics and published procedures for the specific symptom and DTCs. If diagnosis does not reveal a cause, reprogram the BPCM using the following information. The Battery Pack P/N is located on the left side of the Battery Pack case.

Model Year	Battery Pack Assembly Part #	New BPCM Software ID #	New BPCM Software Part #
1998	27004022	98620001	09360589

The new software will allow 100% charge every time the vehicle is placed on charge. The new software calibration will cause an increase in charge times.

Service Procedure

When the reprogramming process is complete, do the following steps:

1. Turn off the vehicle for at least 60 seconds.

2. Start the vehicle and clear the DTCs in the BPCM.

3. Place the vehicle on charge and verify that the vehicle charges until the Charger displays FULL - COMPLETE (up to 8 hrs).

Service Bulletin

File In Section: 6 - Engine
Bulletin No.: 86-62-09
Date: May, 1998

Subject: Coolant Reservoir Leaking (Install a New Propulsion Coolant Reservoir)

Model: 1997-98 Chevrolet S-10 Electric Truck

Condition

Some owners may comment about coolant leaking onto the ground.

Cause

The propulsion coolant reservoir may develop a leak between the tank and the cap of the reservoir.

Correction

Install a new coolant reservoir. Use the following service procedure.

Service Procedure

1. Remove and discard the propulsion coolant tank and the cover assembly. Refer to Propulsion System Cooling in the S-10 Electric Truck Service Manual.
2. Cut the coolant reservoir bracket from the PEB sub-frame using a cut-off saw or a jigsaw (Figure 1).
3. Remove and discard the nut from the stud that mounts the power steering bracket.
4. Align the plastic bracket, P/N 27003947 provided in tank kit, to the existing stud. Drill an 8 mm (0.315 in.) hole on the power steering bracket.
5. Remove all metal debris from the underhood compartment.
6. Attach a U-nut, P/N 11507067, to the power steering bracket on the 8 mm (0.315 in.) hole.
7. Mount the bracket assembly, P/N 27003947, (Figure 2, Item 2) using the bolt, P/N 11505192, (Figure 2, Item 3) and nut, P/N 11514516, (Figure 2, Item 1).
8. Install the new coolant tank assembly, P/N 27004233, to the bracket, P/N 27003947, (Figure 3, Item 1). Be sure that the coolant, P/N 12378390, in the reservoir is at the fill line.
9. Connect the coolant hoses and the electrical connection. Refer to Propulsion System Cooling in the S-10 Electric Truck Service Manual.

Parts Information

P/N	Description	Qty
27004233	Tank Kit, Cool Rcvy Expn	1
12378390	ELECTRA-COOL™* Coolant	1

Parts are currently available from GMSPO.

*We believe this source and their equipment to be reliable. There may be additional manufacturers of such equipment. General Motors does not endorse, indicate any preference for or assume any responsibility for the products or equipment from this firm or for any such items which may be available from other sources.

Warranty Information

For vehicles repaired under warranty, use:

Labor Operation	Description	Labor Time
J3260	Reservoir, Radiator Coolant - Replace	0.6 hr

Important: Labor operation is coded to base vehicle coverage in the warranty system.

Copyright 1998 General Motors Corporation. All Rights Reserved.

Labor Op	Description	Labor Time
J3255	Replace Cap and Clamp	.2

Important: Labor operation is coded to base vehicle coverage in the warranty system.

Figures: 1

Captions: 0

*****DISCLAIMER*****

COPYRIGHT 1997 GENERAL MOTORS CORPORATION.
ALL RIGHTS RESERVED.

Service Bulletin

File In Section Section 6
Bulletin No.: 86-11-08
Date: March 19, 1998

Subject: Heater Coolant Reservoir

Models: 1997 and 1998 Chevrolet S-10 Electric Truck

Condition:
Some owners may comment about coolant leaking onto the ground or the lack of fuel-fired heat below 40 degrees F.

Cause:
The rubber cap utilized on one of the fuel-fired heater reservoir ports splits causing a coolant leak.

Correction:
Replace the old cap and clamp with new cap and clamp.

Service Procedure:

1. Remove the old clamp and cap.
2. Install new cap and clamp.
   Refer to Figure 1.

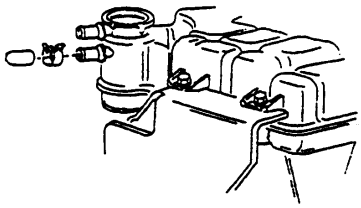

Figure 1

Parts Information:

P/N	Description	QTY
27004546	Cap	1
14064656	Clamp	1

Warranty Information:

For vehicles repaired under warranty, use:

Central Office
Chevrolet Motor Division
General Motors Corporation
100 Renaissance Center, P.O. Box 100, Detroit, MI 48265-1000

CHEVROLET

RECEIVED
SEP 2 1998
ENERGY PLANNING
C98031-SANDY

August, 1998

Dear S-10 Electric Owner:

This notice is sent to you in accordance with the National Traffic and Motor Vehicle Safety Act.

REASON FOR THIS RECALL:

General Motors has decided that a defect which relates to motor vehicle safety exists in 1997-98 Chevrolet S-10 trucks with electric drive. Rapid fogging of the interior glass can occur within two minutes after the heat is turned on if (1) the outside temperature is between 35 and 76 degrees Fahrenheit and (2) water has collected on the heat exchanger during previous operation of the air conditioning (water can remain there even several days after the air conditioning was used). If rapid fogging were to occur during driving, it could obstruct the driver's vision and lead to a crash without prior warning.

WHAT YOU SHOULD DO:
Advise all drivers to follow this procedure to help avoid fogging during driving:

"Stop and Wait" Procedure

- Never depress the heat switch while you are driving.
- When heat is needed, park the vehicle in a safe place. Depress the heat switch. If no fogging occurs after three minutes, you may begin driving. If fogging occurs, use the defrost mode until the windows are clear for safe operation of the vehicle.

Use of an "anti-fogging" agent on the inside surfaces of the vehicle's glass, according to the manufacturer's directions, can reduce the severity of fogging. The effectiveness of these agents is a function of many variables, such as time since the last application, any cleaning of the inside glass surfaces during vehicle wash, etc.. All drivers should continue to follow the procedures described above even when an "anti-fogging" agent is used.

WHAT WE WILL DO: To remind drivers of the "stop and wait" procedure, we are enclosing a caution label for installation on your vehicle and a supplemental insert for your owner's manual. You should install the enclosed caution label on your vehicle according to the attached instructions or your Chevrolet dealer will install it for you at no charge.

HOW LONG WILL THE REPAIR TAKE? The length of time required for the dealer to perform this inspection and service correction, if required, is approximately 10-15 minutes. Additional time may be required to schedule and process your vehicle. If your dealer has a large number of vehicles awaiting service, this additional time may be significant. Please ask your dealer if you wish to know how much additional time will be needed.

If, after contacting your Chevrolet dealer, you are still not satisfied we have done our best to remedy this condition without charge and within a reasonable time, you may wish to write the Administrator, National Highway Traffic Safety Administration, 400 Seventh St., S.W., Washington, DC 20590, or call 1-800-424-9393 (Washington, DC residents use [202]366-0123).

General Motors places the highest priority on owner safety and satisfaction. We sincerely regret any inconvenience this may have caused you.

Chevrolet Motor Division
General Motors Corporation

Enclosure

DEAR CHEVY CUSTOMER:

DUE TO A PROCESSING PROBLEM, YOU MAY HAVE NOT RECEIVED THE SUPPLEMENTAL INSERT WITH YOUR INITIAL RECALL MAILING FOR CAMPAIGN 98031.

PLEASE ACCEPT OUR APOLOGY FOR ANY INCONVENIENCE THIS MAY HAVE CAUSED YOU.

ENCLOSED YOU WILL FIND THE CORRECT LITERATURE FOR YOUR VEHICLE.

SINCERELY,

CAMPAIGN INFORMATION PROCESSING CENTER

Caution Label Installation Procedure

1. Insure mounting surface is clean.
2. Install caution label on headliner centered between visors as shown in Figure 1 below.

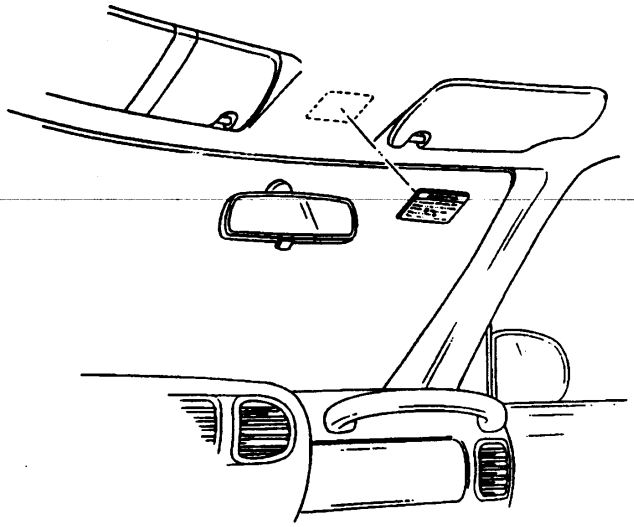

Figure 1 - Caution Label Installation

Supplemental Insert Installation Procedure

1. Insert the Supplement in the Owner's Manual