APPENDIX A – SYSTEM DRAWINGS

Figure A-1. APS Alternative Fuel Pilot Plant Facility Plan View

Figure A-2. APS Alternative Pilot Plant Production Equipment Plan

Figure A-3. APS Alternative Pilot Plant Production And Control Room Plan View

Figure A-4. APS Alternative Pilot Plant Production Hydrogen System Piping and Instrument Diagram

Figure A-5. APS Alternative Pilot Plant Production CNG System Piping and Instrument Diagram

Figure A-1. APS Alternative Fuel Pilot Plant Facility Plan View

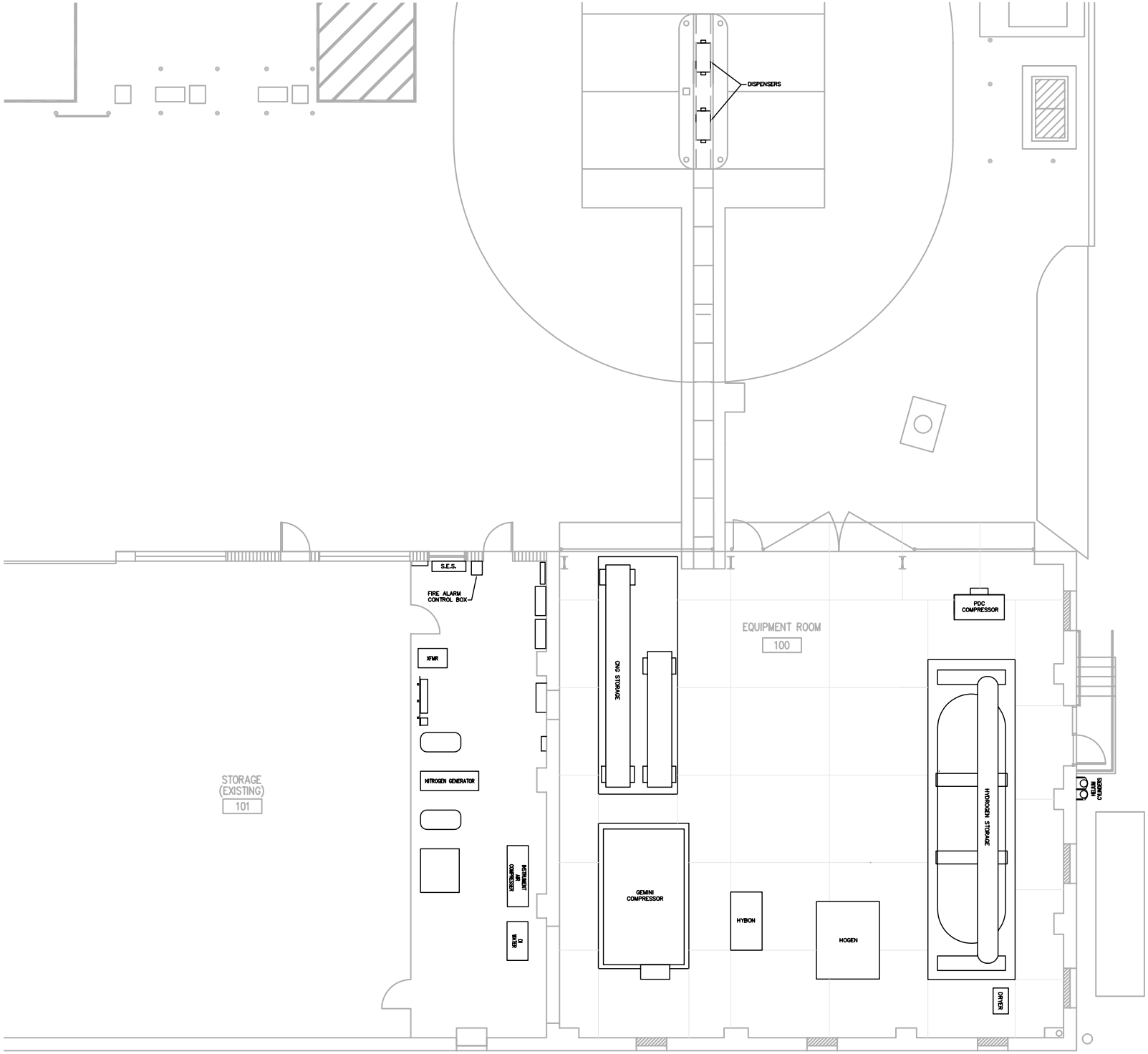

REVISION	DATE
0	4/8/03

JOB NUMBER
C0130

DRAWN BY:
A. TURNER

CHECKED:
S. McCAMMAN

Contractor must verify all dimensions at project site before proceeding with this work.
Do not reproduce these drawings and specifications without the expressed written permission of Pinnacle West. The drawings and specifications are instruments of service, and shall remain the property of Pinnacle West whether the project for which they are made is executed or not. These drawings and specifications shall not be used by anyone on any other project, for additions to this project, or for the completion of this project by others except by the expressed written permission of Pinnacle West.
PINNACLE WEST® A CAPITAL CORPORATION

ALTERNATIVE FUELS PILOT PLANT FACILITY

NORTH EAST CORNER OF 2nd AV. & BUCHANAN
APS 501 SOUTH 2nd AV. CAMPUS.
PHOENIX, ARIZONA

PINNACLE WEST℠
CAPITAL CORPORATION

S1

Figure A-2. APS Alternative Pilot Plant Production Equipment Plan

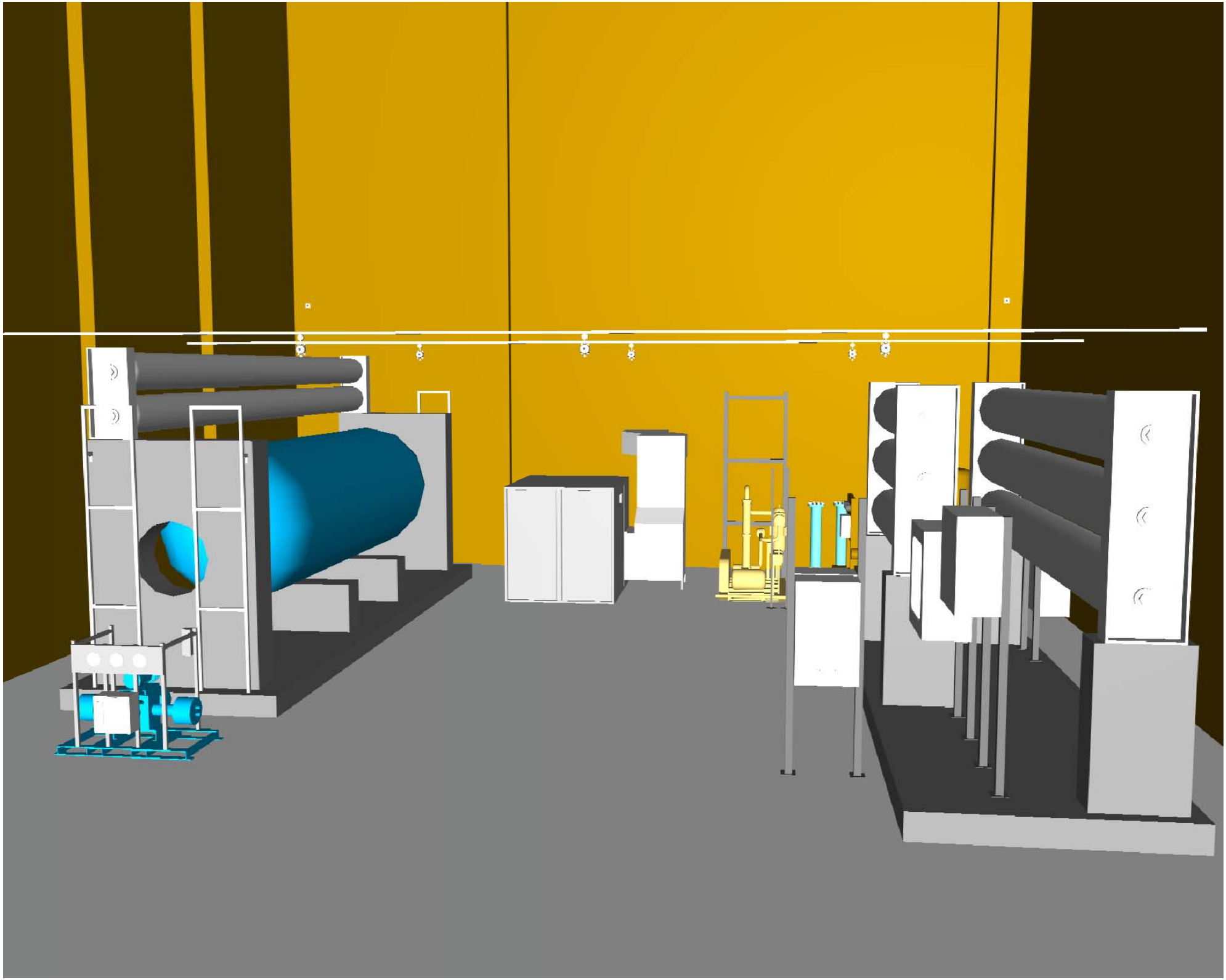

Figure A-3. APS Alternative Pilot Plant Production And Control Room Plan View

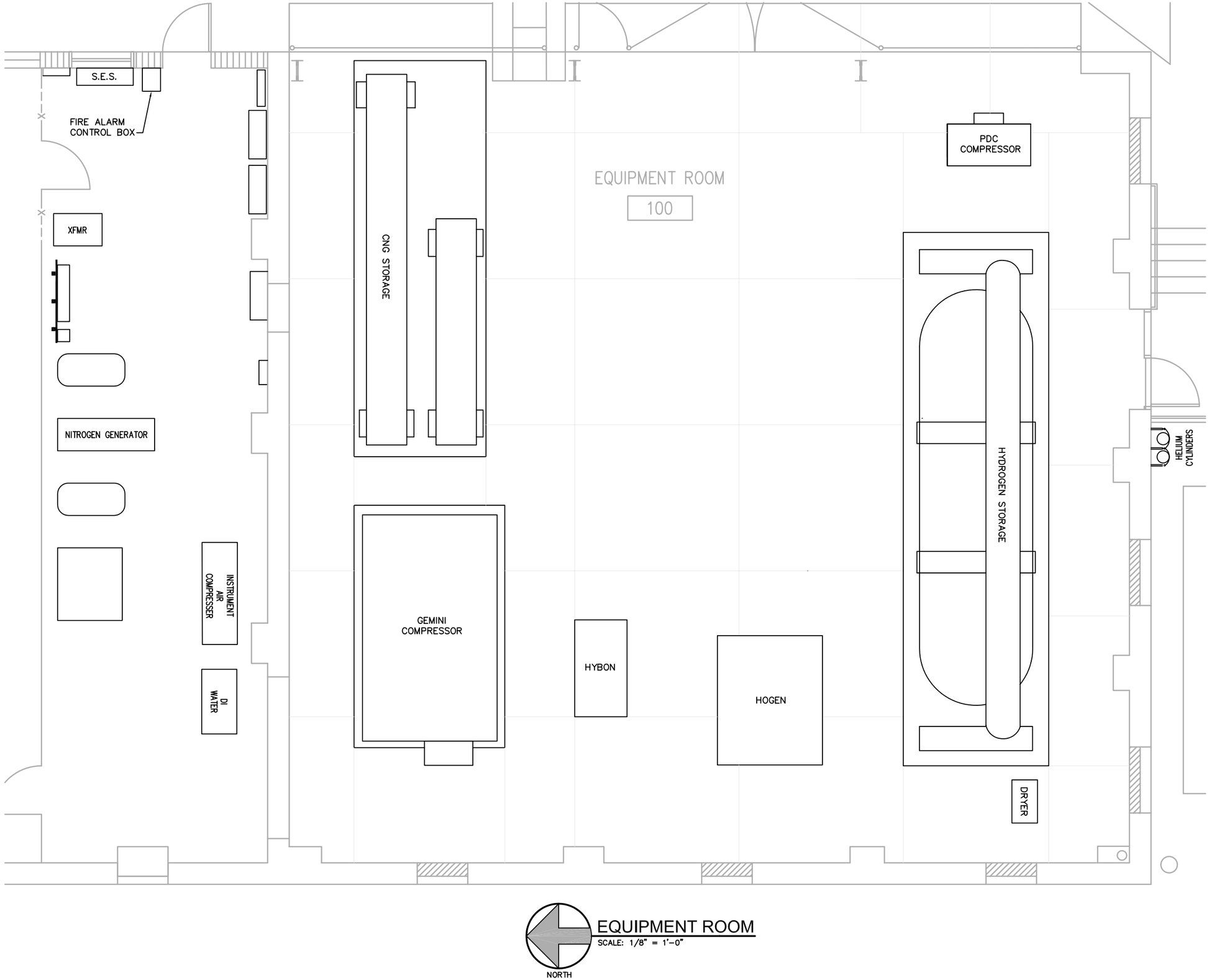

EQUIPMENT ROOM
SCALE: 1/8" = 1'-0"

REVISION	DATE
0	4/8/03

JOB NUMBER
C0130

DRAWN BY:
A. TURNER

CHECKED:
S. McCAMMAN

Contractor must verify all dimensions at project before proceeding with this work.
Do not reproduce these drawings and specifications without the expressed written permission of Pinnacle West. The drawings and specifications are instruments of service and shall remain the property of Pinnacle West whether the project for which they are made is executed or not. These drawings and specifications shall not be used by anyone on any other projects, for additions to this project, or for completion of this project by others, except by the expressed written permission of Pinnacle West.
PINNACLE WEST: A CAPITAL CORPORATION

ALTERNATIVE FUELS PILOT PLANT FACILITY

NORTH EAST CORNER OF 2nd AV. & BUCHANAN
APS 501 SOUTH 2nd AV. CAMPUS.
PHOENIX, ARIZONA

PINNACLE WEST SM
CAPITAL CORPORATION

S2

Figure A-4. APS Alternative Pilot Plant Production Hydrogen System Piping and Instrument Diagram

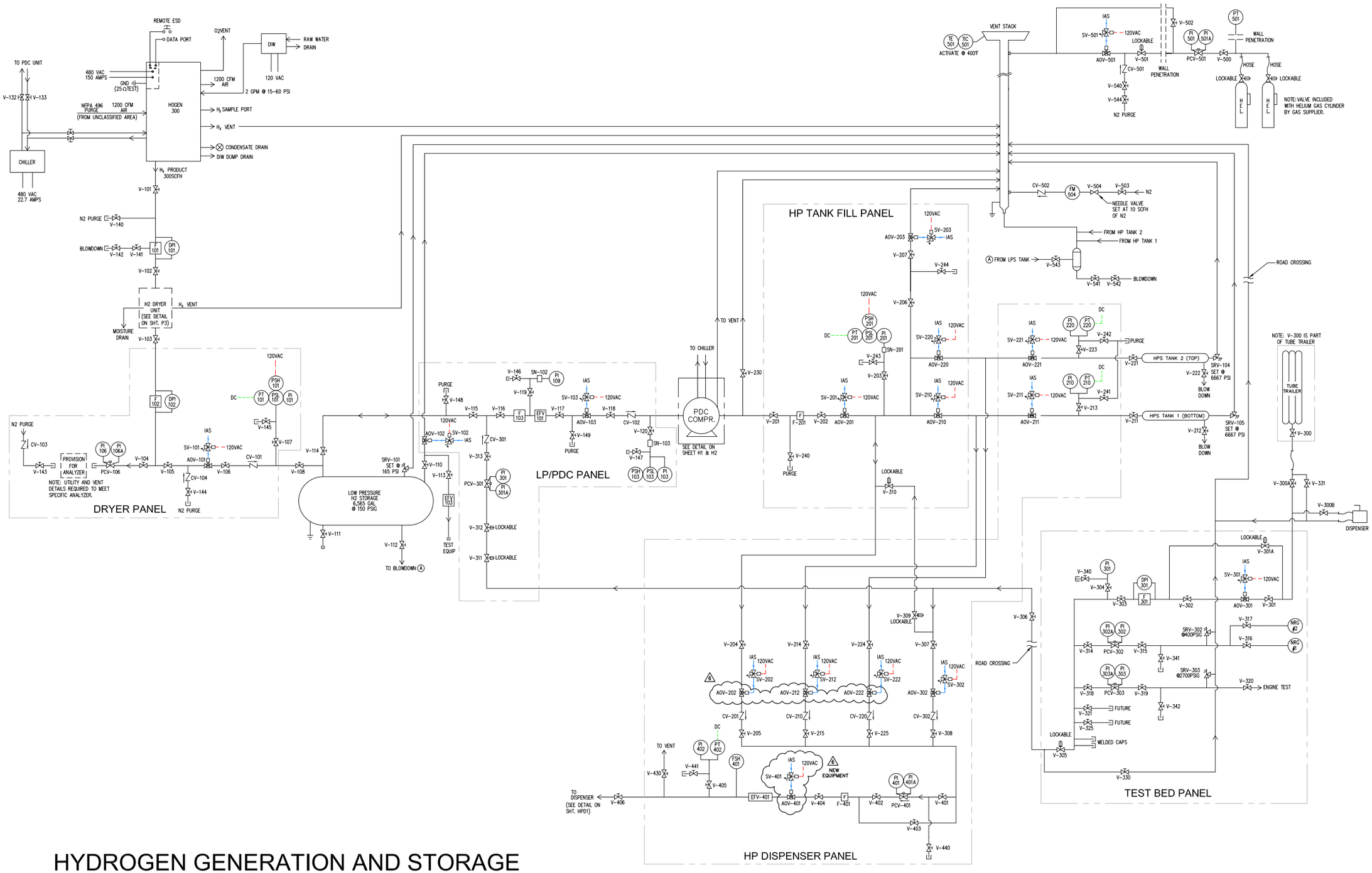

HYDROGEN GENERATION AND STORAGE

REVISIONS	
DATE	DESCRIPTION
12/13/02	AOV-202,212,222 CHANGED, AOV & SV-401 ADDED
–	–
–	–
–	–
–	–
–	–

REVISION	DATE
6	11/18/02

JOB NUMBER
C0350

DRAWN BY:
A. TURNER

CHECKED:
S. MCCAMMAN

BOYLE & ASSOCIATES
4848 CANTERBURY DRIVE
EMMAUS, PA 18049
610.965.2228(PHONE)
610.967.2420(FAX)

ALTERNATIVE FUELS
PILOT PLANT

HYDROGEN GENERATION
AND STORAGE

PINNACLE WEST CAPITAL CORPORATION

P1

Figure A-5. APS Alternative Pilot Plant Production CNG System Piping and Instrument Diagram

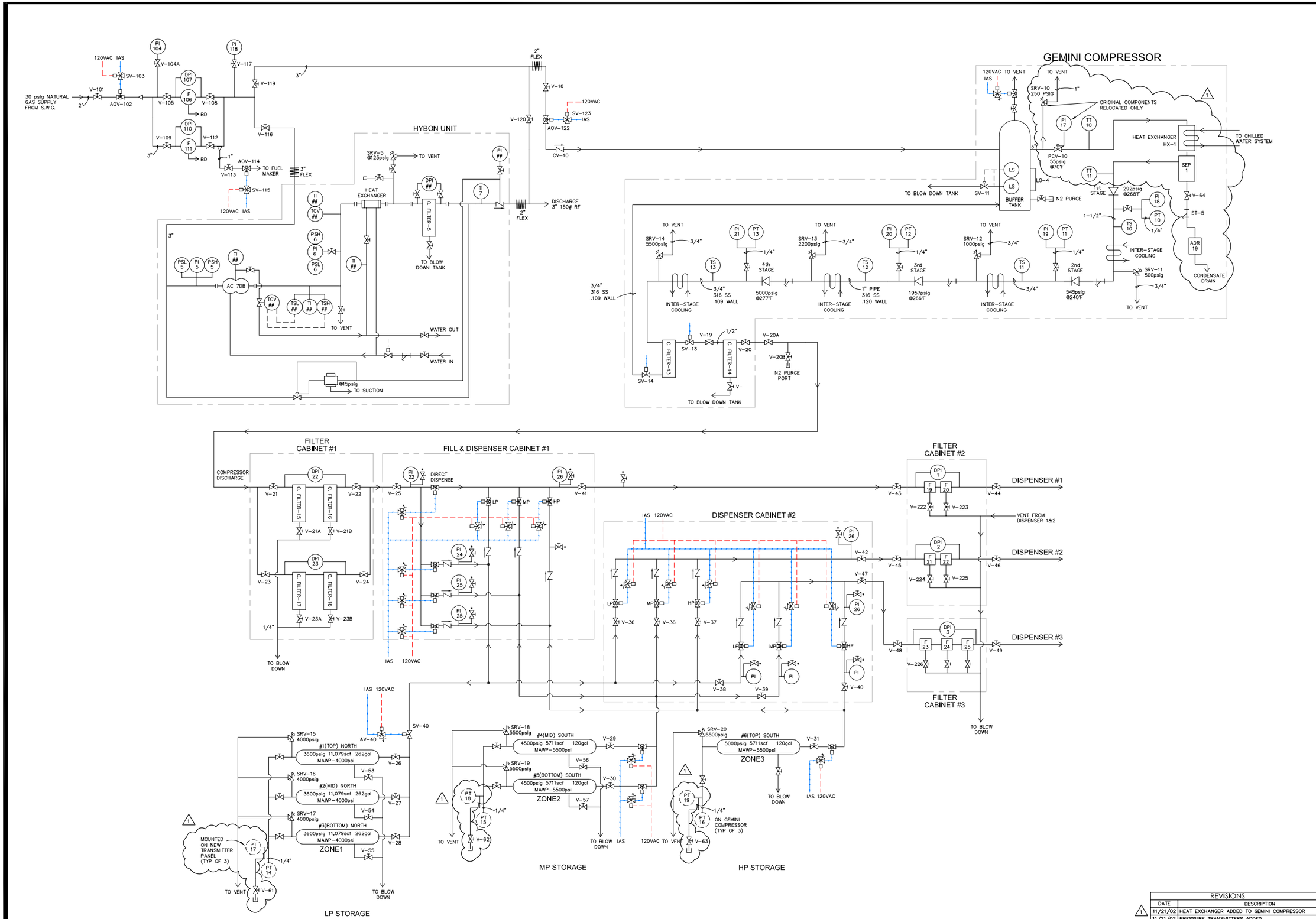

PROCESS FLOW SHEET FOR NATURAL GAS SYSTEM

REVISIONS	
DATE	DESCRIPTION
11/21/02	HEAT EXCHANGER ADDED TO GEMINI COMPRESSOR
11/21/02	PRESSURE TRANSMITTERS ADDED
--	--
--	--
--	--
--	--

REVISION 1	DATE 1/10/03
JOB NUMBER C0130	
DRAWN BY: A. TURNER	
CHECKED: J. BOYLE	

BOYLE & ASSOCIATES
4848 CANTERBURY DRIVE
EMMAUS, PA 18049
610.965.3208(PHONE)
610.967.2420(FAX)

ALTERNATIVE FUELS PILOT PLANT FACILITY

NORTH EAST CORNER OF 2nd AV. & BUCHANAN
APS SOUTH 2nd AV. CAMPUS.
PHOENIX, ARIZONA

PINNACLE WEST CAPITAL CORPORATION

P6