CHAPTER 4. SCREENING ANALYSIS

TABLE OF CONTENTS

4.1 INTRODUCTION 4-1
4.2 SCREENED-OUT TECHNOLGIES 4-2
4.2.1 Compressor Part Load Operation 4-2
4.2.2 Increased Surface Area for Condensers in Water-Cooled Batch Ice Makers 4-2
4.2.3 Enhanced Fin Surfaces 4-3
4.2.4 Increased Condenser Water Flow 4-3
4.2.5 Brazed Plate Condenser for Water-Cooled Condensers 4-4
4.2.6 Increased Evaporator Surface Area (Batch Ice Makers) 4-4
4.2.7 Technology Options to Reduce Evaporator Thermal Cycling 4-4
4.2.8 Technology Options that Reduce Harvest Meltage or Reduce Harvest Time 4-4
4.2.9 Improved or Thicker Insulation 4-5
4.2.10 Larger Diameter Suction Line (Remote Compressor Equipment) 4-5
4.2.11 Reduced Potable Water Flow 4-5
4.2.12 Drain Water Thermal Exchange 4-5
4.2.13 Technology Options Requiring Ice-Making Head or Self-Contained Unit Size Increase 4-6
4.3 REMAINING TECHNOLOGIES 4-8

LIST OF TABLES

Table 4.2.1 Screening Justification 4-7

LIST OF FIGURES

Figure 4.2.1 Ice Maker Showing External Installation of Drain Water Heat Exchanger 4-6

CHAPTER 4. SCREENING ANALYSIS

4.1 INTRODUCTION

This chapter details the screening analysis that the U.S. Department of Energy (DOE) conducted in support of the ongoing energy conservation standards rulemaking for automatic commercial ice-making (ACIM) equipment.

In the market and technology assessment (chapter 3 of the preliminary technical support document (preliminary TSD)), DOE presents an initial list of technologies that can improve the energy efficiency of automatic commercial ice makers. The purpose of the screening analysis is to evaluate the technologies that improve equipment efficiency to determine which technologies to consider further and which to screen out. DOE consulted with a range of parties, including ACIM industry representatives, technical experts, and others, to develop a list of technologies for consideration. DOE evaluated the technologies pursuant to the criteria set out in the Energy Policy and Conservation Act (EPCA), as amended. (42 U.S.C. 6311–6317)

EPCA establishes criteria for prescribing new or amended standards designed to achieve the maximum improvement in energy efficiency. Further, EPCA directs the Secretary of Energy to determine whether a standard is technologically feasible and economically justified. (42 U.S.C. 6295(o)(2)(A)–(B) and 6313(d)(4))

Appendix A to subpart C of 10 CFR part 430, "Procedures, Interpretations and Policies for Consideration of New or Revised Energy Conservation Standards for Consumer Products" (the Process Rule), sets forth procedures to guide DOE in its consideration and promulgation of new or revised equipment energy conservation standards. These procedures elaborate on the statutory criteria provided in 42 U.S.C. 6295(o) and, in part, eliminate problematic technologies early in the process of prescribing or amending an energy conservation standard. In particular, sections 4(b)(4) and 5(b) of the Process Rule guide DOE in determining whether to eliminate from consideration any technology that presents unacceptable problems with respect to the following criteria. To fulfill statutory criteria for prescribing energy standards for automatic commercial ice makers as established in 42 U.S.C. 6295(o) and 6313(d)(4), DOE applied the provisions in the Process Rule in its screening analysis for this rulemaking.

Technological feasibility. Technologies incorporated in commercial equipment or in working prototypes will be considered technologically feasible.

Practicability to manufacture, install, and service. If mass production of a technology in commercial equipment and reliable installation and servicing of the technology could be achieved on the scale necessary to serve the relevant market at the time of the effective date of the standard, then that technology will be considered practicable to manufacture, install, and service.

Impacts on equipment utility or equipment availability. If a technology is determined to have a significant adverse impact on the utility of the equipment to significant subgroups of customers, or result in the unavailability of any covered equipment type with performance characteristics (including reliability), features, sizes, capacities, and volumes that are

substantially the same as equipment generally available in the United States at the time, it will not be considered further.

Adverse impacts on health or safety. If it is determined that a technology will have significant adverse impacts on health or safety, it will not be considered further.

In sum, if DOE determines that a technology, or a combination of technologies, has unacceptable impacts on the policies stated in section 5(b) of the Process Rule, it will be eliminated from consideration. If a technology fails to meet one or more of the four criteria, it will be screened out. Section 4.2 documents the reasons for eliminating the technologies that were screened out.

4.2 SCREENED-OUT TECHNOLGIES

This section describes the technologies that DOE eliminated for failure to meet one of the following four criteria: (1) technological feasibility; (2) practicability to manufacture, install, and service; (3) impacts on equipment utility or equipment availability; and (4) adverse impacts on health or safety. The discussion also points out which technologies have not been analyzed in the engineering and downstream analyses for other reasons, including that they don't save energy, their energy savings are not captured in the test procedure, or they are proprietary.

However, DOE intends to consider reversing the screening decisions on some of the technologies in the notice of proposed rulemaking (NOPR) phase, depending on comments and information received on the preliminary analysis. This applies to the following technologies:

- potable water use reduction
- condenser water use increase
- technology options to reduce evaporator thermal cycling
- drain water thermal exchange
- technology options requiring size increase

4.2.1 Compressor Part Load Operation

While there may be benefits associated with operation of an ice maker compressor at part load when ice demand is moderate or low, DOE is not aware of any commercialized product or prototype that has been constructed and tested to illustrate the benefits and/or reliability of this technology option. Hence, this technology option must be screened out based on the technical feasibility criterion.

4.2.2 Increased Surface Area for Condensers in Water-Cooled Batch Ice Makers

Increased condenser surface area has been screened out in the preliminary analysis for water-cooled batch ice makers. Condenser water flow in water-cooled condensers is controlled using water flow control valves that adjust the flow to maintain a constant condensing pressure. DOE test data show that the condensing temperature of a typical water-cooled batch ice maker stays relatively constant, demonstrating that the condensers are sized well for their peak loads, which occur near the start of the freeze cycle. Because of the water valve control, larger

condensers would not significantly reduce condensing temperature. The valve setting would also have to be adjusted to reduce the condensing temperature and thereby achieve significant energy savings.

Based on discussions with manufacturers during the preliminary analysis phase, a significant reduction in condensing temperature to reduce freeze cycle energy use would compromise harvest performance, leading to potential reliability concerns and/or increasing harvest cycle energy use such that overall energy use would not decrease. Specifically, a reduction in condensing temperature would reduce the amount of heat available in the compressor to achieve harvest, because the compressor power input during the freeze cycle would be reduced. During the harvest cycle, the compressor heat is rapidly transferred to the evaporator. As the amount of heat available is reduced (*i.e.*, as a result of lower condensing temperature during the freeze cycle), at some point the harvest cycle impacts would likely negate any further energy use benefits. The appropriate typical freeze cycle condensing temperatures used by manufacturers have presumably been selected based on testing. The condensing pressure or temperature setpoints of condenser water control valves are very consistent across the industry (based on manufacturer interviews and ice maker testing). Hence, DOE believes that the industry has optimized water-cooled condenser design and operating parameters and that the potential for improvement through condenser size increase is limited. This design option has been screened out based on reliability concerns associated with avoidance of freeze-ups as well as insignificant potential for energy savings.

Note that stakeholders have commented that condenser water flow rate could be reduced through use of larger water-cooled condensers. (Scotsman, No. 22 at p. 5[a]) In the NOPR phase, DOE may consider use of this design option in combination with condenser water flow reduction to allow consideration of other energy saving design options within a given life-cycle cost target. See chapter 2 of the preliminary TSD for further discussion of integrating reduction of condenser water use into the analysis.

4.2.3 Enhanced Fin Surfaces

DOE is not aware of any enhanced fin surfaces available for air-cooled condensers that would significantly improve heat transfer and efficiency in automatic commercial ice makers that are not already used extensively in the industry for air-cooled models. Hence, DOE is screening out this option because it is already in use and does not represent an option for improved efficiency.

4.2.4 Increased Condenser Water Flow

DOE did not consider condenser water flow increase as a design option in the preliminary analysis because ice makers covered under the current DOE regulations have standards specifying maximum allowable condenser water use. For other ice makers, in the preliminary

[a] A notation in this form provides a reference for information that is in the docket of DOE's rulemaking to develop energy conservation standards for automatic commercial ice makers (Docket No. EERE-2010-BT-STD-0037), which is maintained at www.regulations.gov. This notation indicates that the statement preceding the reference is document number 22 in the docket for the ACIM energy conservation standards rulemaking, and appears at page 5 of that document.

analysis DOE expected that condenser water use standard levels would be set that would preclude consideration of technologies that increase condenser water flow. Also, as described in section 4.2.2, condensing temperature reductions can degrade harvest performance, which could affect reliability. However, as part of the NOPR phase analyses DOE intends to consider condenser water flow increase, depending on comments and input received on the preliminary analysis. Condenser water flow increase is discussed in chapter 2 of the preliminary TSD.

4.2.5 Brazed Plate Condenser for Water-Cooled Condensers

DOE has concluded that use of brazed plate condensers does not represent a viable design option for batch ice makers because (1) most ice makers using water-cooled condensers have space for condenser surface area growth rather than requiring use of more expensive condenser technology such as brazed plate; and (2) for batch ice makers, as described in section 4.2.2 reduction of condensing temperature reduces the effectiveness of harvest and is not expected to significantly reduce energy use.

4.2.6 Increased Evaporator Surface Area (Batch Ice Makers)

DOE has determined that an increase in the size of batch ice maker evaporators would generally require an increase in the size of the ice-making head of the ice maker, or, for self-contained ice makers, would either reduce ice storage capacity or require an increase in the size of the ice maker. These impacts represent reductions in utility; hence, this design option was not considered in the preliminary analysis. See also the discussion of size increase in section 4.2.13.

4.2.7 Technology Options to Reduce Evaporator Thermal Cycling

Although there are numerous patents identifying evaporator design concepts that would reduce thermal mass and thus reduce evaporator thermal cycling, DOE was able to identify only one such technology, used in ice makers sold by Hoshizaki America, Inc., that has demonstrated technical feasibility (*i.e.*, is commercially available or for which prototype test data are publicly available). The Hoshizaki evaporator design has significantly less thermal mass than the evaporator designs of most other ice maker manufacturers. While some patents associated with this evaporator design have expired or are at their end of their applicable life, others are not. DOE has not determined conclusively whether the Hoshizaki design is proprietary. However, DOE did not include reduced evaporator thermal cycling as a design option in its preliminary analysis. DOE requests information on the status of this technology in the preliminary TSD executive summary. Depending on the information obtained, DOE may consider this technology option in the NOPR engineering analysis.

4.2.8 Technology Options that Reduce Harvest Meltage or Reduce Harvest Time

As discussed in chapter 3, manufacturers have implemented design changes to reduce harvest meltage and reduce harvest time in batch ice makers. DOE has been unable to identify additional design changes that are not already in use in the industry to further improve harvest cycle efficiency. Hence, for most batch ice makers, this technology option is screened out because it does not save additional energy. However, some ice makers do not incorporate all of the available techniques used by manufacturers to improve harvest, so DOE has considered this

option selectively in the engineering analysis (chapter 5 of the preliminary TSD), based on specific equipment characteristics.

4.2.9 Improved or Thicker Insulation

Insulation used in ice makers may reduce thermal loss, but, as indicated by stakeholders in comments (see chapter 2 of the preliminary TSD), it is primarily used to prevent condensation of water on cold surfaces. A small amount of additional thermal loss could be prevented through the use of improved or thicker insulation. However, the impact of this efficiency improvement is small enough to be nearly immeasurable. Hence, this technology option has been screened out.

4.2.10 Larger Diameter Suction Line (Remote Compressor Equipment)

Increasing the suction line diameter could be considered to reduce suction line pressure drop for remote condenser equipment with remote compressors. However, the reduced suction vapor velocity associated with the approach can degrade oil return effectiveness. Remote ice maker line sets can be installed in the field so that suction line refrigerant runs up, down, or horizontally to the compressor; hence, they are conservatively sized to provide adequate oil return for a wide range of installation conditions. DOE has not considered increase in suction line size in the preliminary analysis due to reliability concerns associated with potential oil hold-up and compressor failure associated with larger-diameter line sets.

4.2.11 Reduced Potable Water Flow

Stakeholders have commented regarding the potential pitfalls of reducing potable water flow (see chapter 2 of the preliminary TSD). DOE did not consider this design option in the preliminary analysis due to concerns about reliability and increased maintenance costs associated with the potential for scaling (*i.e.*, dissolved solids in the water coming out of solution on icemaker surfaces). DOE may consider this design option in the NOPR phase analyses, and requests quantitative information regarding acceptable lower limits on potable water use for batch ice makers.

4.2.12 Drain Water Thermal Exchange

DOE is aware that suppliers have offered heat exchangers for use in ice makers for drain water thermal exchange. However, because DOE initially was not able to identify any suppliers currently offering such components, DOE could not properly assess the efficiency/cost relationships. For this reason, this technology was not considered in the preliminary analysis.

Subsequently, DOE was able to identify one available product that appears to be sold only for aftermarket installation, Chill Ice.[b] This product is installed external to the ice maker, and both drain water and supply water are piped through the device, as illustrated in Figure 4.2.1. DOE has considered whether such a component could be part of an ice maker as defined in EPCA. The EPCA definition for automatic commercial ice makers states that the ice maker consists of a condensing unit and ice-making section operating as an integral unit, with means for making and harvesting ice. The definition allows that the ice maker may include means for

[b] www.ajantunes.com/Vizion/CategoryFood.aspx?CategoryId=8#anchor71.

storing ice, dispensing ice, or storing and dispensing ice. None of the subcomponents of the ice maker listed in the definition could be interpreted as referring to heat exchangers for drain water thermal exchange. DOE notes that an ice maker can still make ice without a drain water heat exchanger; hence, the heat exchanger cannot be considered an essential part of the equipment. For these reasons, DOE has concluded that such a component would not be part of the ice maker and therefore could not, in this configuration, be considered as a design option.

If the drain water heat exchanger were integrated into the ice-making head package, a possible alternative design configuration, the conclusion would be different. However, in such an embodiment, space would have to be made for the heat exchanger, and the ice-making head package size would have to increase. DOE did not consider such size increases in the preliminary analysis due to concerns about the associated consumer utility impact (see further discussion of size increase in section 4.2.13). In addition, DOE was not able to identify any information showing the performance characteristics of such a drain water heat exchanger. Depending on stakeholder input, consideration of the impacts of ice maker head size increase, and availability of relevant technical information regarding performance of an integrated drain water heat exchanger, DOE may consider this technology in the engineering analysis as part of the NOPR phase.

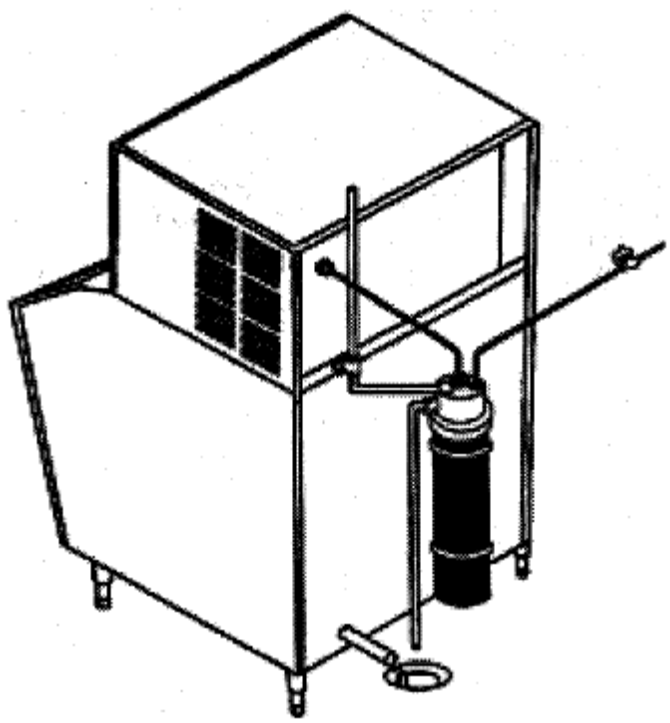

Figure 4.2.1 Ice Maker Showing External Installation of Drain Water Heat Exchanger

4.2.13 Technology Options Requiring Ice-Making Head or Self-Contained Unit Size Increase

For the preliminary analysis, DOE has screened out design options that require an increase in equipment size. These design options include an increase in surface area for air-

cooled condensers and batch ice maker evaporators and a potential configuration for drain water thermal exchange. DOE has taken this approach in the preliminary analysis due to the equipment utility reduction associated with an increase in equipment size. Limited space is available in kitchens for larger ice-making heads or self-contained unit cabinets. In addition, a large percentage of the market involves replacement of old products at the end of their useful life—allowing size increases would force use of lower-capacity machines in replacement applications, a clear reduction in equipment utility. DOE's analysis makes an exception for remote condensers, for which DOE believes installers have more flexibility to find space.

Not allowing an increase in equipment size affects some design options more than others. DOE determined in the preliminary analysis that a limited increase in air-cooled condenser size is possible within the confines of some ice maker products, but this was not true for all air-cooled products analyzed. However, DOE has not considered an increase in the size of batch product evaporators because of the impacts associated with increased size.

DOE may reconsider screening out this design option, and specifically requests comment on this issue in the preliminary TSD executive summary.

Table 4.2.1 summarizes the technologies that were screened out for the preliminary analysis or were not considered in the engineering analysis for other reasons.

Table 4.2.1 Screening Justification

Design Option	EPCA Criteria for Screening				Not Considered in the Analysis for Other Reasons		
	Technological Feasibility	Practicability to Manufacture, Install, and Service	Adverse Impacts on Product Utility	Adverse Impacts on Health and Safety	No Energy Savings or Savings not Measurable	Test Procedure Efficiency Metric Does Not Capture Savings	Proprietary Technology
Compressor Part Load Operation	√					√	
Increased Surface Area for Water-Cooled Condensers in Batch Ice Makers			√		√		
Enhanced Fin Surfaces					√		
Increased Condenser Water Flow			√				
Brazed Plate Condenser					√		
Increased Evaporator Surface Area (Batch Ice Makers)			√				
Technology Options to Reduce Evaporator Thermal Cycling							√
Technology Options Which Reduce Harvest Meltage or Reduce Harvest Time					√		
Improved or Thicker Insulation					√		
Larger Diameter Suction Line			√				
Reduced Potable Water Flow			√				
Drain Water Thermal Exchange			√				

4.3 REMAINING TECHNOLOGIES

After eliminating those technologies that are proprietary, have no significant effect, or do not reduce energy use as measured by the test procedure, and screening out those technologies that do not meet the requirements of sections 4(a)(4) and 5(b) of the Process Rule, DOE considered the following technologies in the preliminary analysis:

- improved compressor efficiency
- increased condenser surface area (except for water-cooled batch ice makers)
- increased condenser air flow
- higher efficiency condenser fans and fan motors
- improved auger motor efficiency
- improved pump motor efficiency
- increased evaporator surface area (continuous ice makers only)
- design options which reduce harvest meltage or reduce harvest time (limited consideration depending on existing equipment characteristics)