© 2008 Building Science Press All rights of reproduction in any form reserved.

Building a Durable and Energy Efficient Home in Post-Katrina New Orleans

Research Report - 0704
July-2007
Peter Baker, P.Eng.

Abstract:

Given what happened in New Orleans during hurricane Katrina, changes in the way we build are needed. Looking to key sustainability concepts of durability and energy efficiency, new flood resistant design concepts were developed.

Building a Durable and Energy Efficient Home in Post Katrina New Orleans

Peter Baker, P.Eng., Building Science Corporation

ABSTRACT

Given what happened in New Orleans during hurricane Katrina, changes in the way we build are needed. Looking to key sustainability concepts of durability and energy efficiency, new flood resistant design concepts were developed. Through the combined efforts of Building Science Corporation, The Louisiana State University, and the Catholic Charities Group, a systems engineering approach was used, that considered all aspects of house design, to develop a house plan that will make these new design concepts reality. Durability upgrades affected the structural requirements, water and vapor management, and material choice. While these upgrades result in an increase in the initial cost of the house, material use and energy efficiency strategies were examined to offset a portion of the initial cost, and provide a means to pay back the initial investment over time.

Introduction

The amount of destruction that was experienced in New Orleans during Hurricane Katrina was staggering: two years after the event, the damage is still apparent. While a significant amount of work has been accomplished in cleaning up the damaged areas, unfortunately rebuilding is still on the horizon for many families. The cost to rebuild is high, but also the disruption to peoples' lives has been severe. To prevent future devastation on the same scale, changes in the way homes are constructed in New Orleans are necessary. Designing homes with key sustainability concepts for durability and energy efficiency provides insurance to people in the event of another major hurricane. These strategies reduce the capital cost of repairs, the time for recovery, and the disruption to peoples' lives in the event of a major storm, but in addition also reduce the energy consumption and utility costs.

These key sustainable design concepts use a systems engineering approach that considers all aspects of the house design. Structural requirements, water management, material durability, material use, and energy efficiency are examined together, to come up with the most effective solution. In essence, the task is to design a building that can withstand the environment that is it placed in, be energy efficient, and be cost effective.

At the core of the design is the overall durability of the building: while not always considered at the outset of construction, designing for durability can save significant time and money in the future. The key is to find a balance between adding costs for durability, and reducing costs by efficient material use and energy efficiency strategies.

The systems engineering approach incorporates best practice durability strategies that should be incorporated into homes in hurricane and flood prone zones: these strategies were developed from experience gained through examining the various house failures during hurricane events in the Southeastern United States.

Building Science Corporation used this systems engineering approach to develop a house plan for New Orleans. Working with the Catholic Charities Group and Louisiana State University, this house plan is being put into practice.

The Plan

The house plan is a two-story Cape house; this design makes the most of the available living space for the amount of construction materials. The second floor is designed with two bedrooms and one bath; however, for budgetary reasons the second floor can also be initially built as a single room with the possibility for future partitioning at a later date. The floor plan provides adequate living space but keeps the overall foot print small, to help reduce overall energy consumption.

© buildingscience.com

Figure 1: House elevation and floor plan

Structural Requirements

The structure is the basis for the durability of the building. Without a structure that can resist environmental loads, other durability and energy efficiency strategies are no longer effective. Due to the potentially high wind and flood loads of New Orleans, a robust structure is needed: a significant portion of the cost of the home is associated with these structural requirements. These two aspects require extra engineering and materials to make sure that the homes don't float or blow away.

The house is designed to be elevated at a minimum of 5 feet above finished grade to meet the new FEMA Advisory Base Flood Elevation (ABFE) guidelines. The foundation is either a raised pier construction over spread footings, or a raft slab that allows for water to freely flow below the structure. In reality for this area, the water levels during Katrina rose much higher than the old FEMA BFEs. This demonstrates that while the elevating the structure above the old BFE and perhaps even the new ABFE will reduce the risk of flood damage, it does not guarantee that the home won't be below the flood level. Raising the foundation to a higher level further reduces the risk of flood damage and makes the area usable as a protected area for the family or a carport; however, increasing the height of the foundation would also increase the cost.

Providing foundations that can elevate the structure above the water line, and resist scour, wave forces, uplift, and overturning is expensive. From initial cost estimates, foundation such as these will run $20,000 or more. These values are in line with estimated costs from FEMA's *Recommended Residential Construction for the Gulf Coast Manual: Building on Strong and Safe Foundations* (http://www.fema.gov/library/viewRecord.do?id=1853). While the cost of the foundation may seem excessive, without a proper foundation design, what we do with the house above does not matter.

Figure 2: Tele-Pier by Tri-Dyne

For this initial project, a local pre-manufactured foundation system is being used (Tele-Pier by Tri-Dyne). This system uses precast concrete piers bolted down to a concrete spread footing. The piers can be shimmed to maintain proper elevation of the home if differential settlement occurs.

Above the foundation, the house enclosure and structure have significant requirements as well. Losing the roofs, walls, or windows due to high winds is a major concern. Not only is the damage associated with the loss of a roof significant, but there is also associated secondary damage to the property from water, as well as damage to surrounding properties from airborne debris.

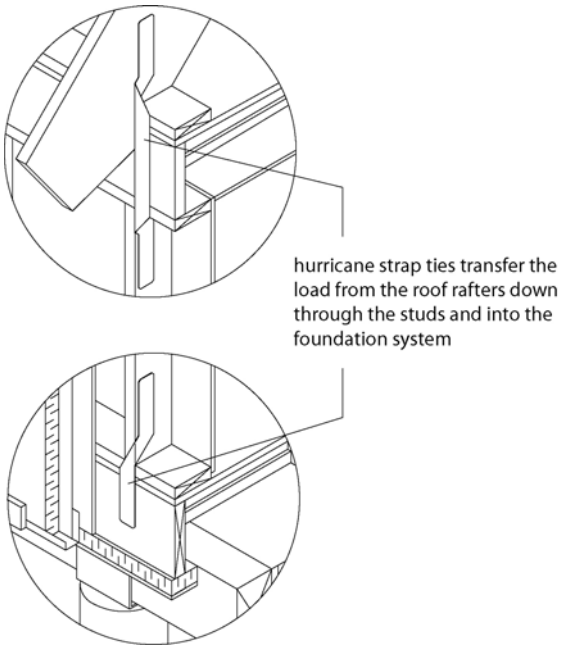

Figure 3: Hurricane ties used to create a load path through the structure

In order to meet the seismic and wind load design requirements for the area (135 mph – 3 second gust), the house is designed to transfer the loads from the roof, through the structure, to the foundation, and ultimately to the ground through a series of framing hurricane ties.

To hold all the remaining elements (sheathing, cladding, roofing, etc.) on the frame, all of the attachments needed to be designed to resist the wind suction forces for pullout and shear.

Water and Moisture Management

Designing homes with attention to water management details is good practice. Period. In locations with increased potential for severe storms and hurricanes, it is essential. The basic concepts are draining water off the building, draining water out of assemblies, and allowing ground water to flow freely below the structure.

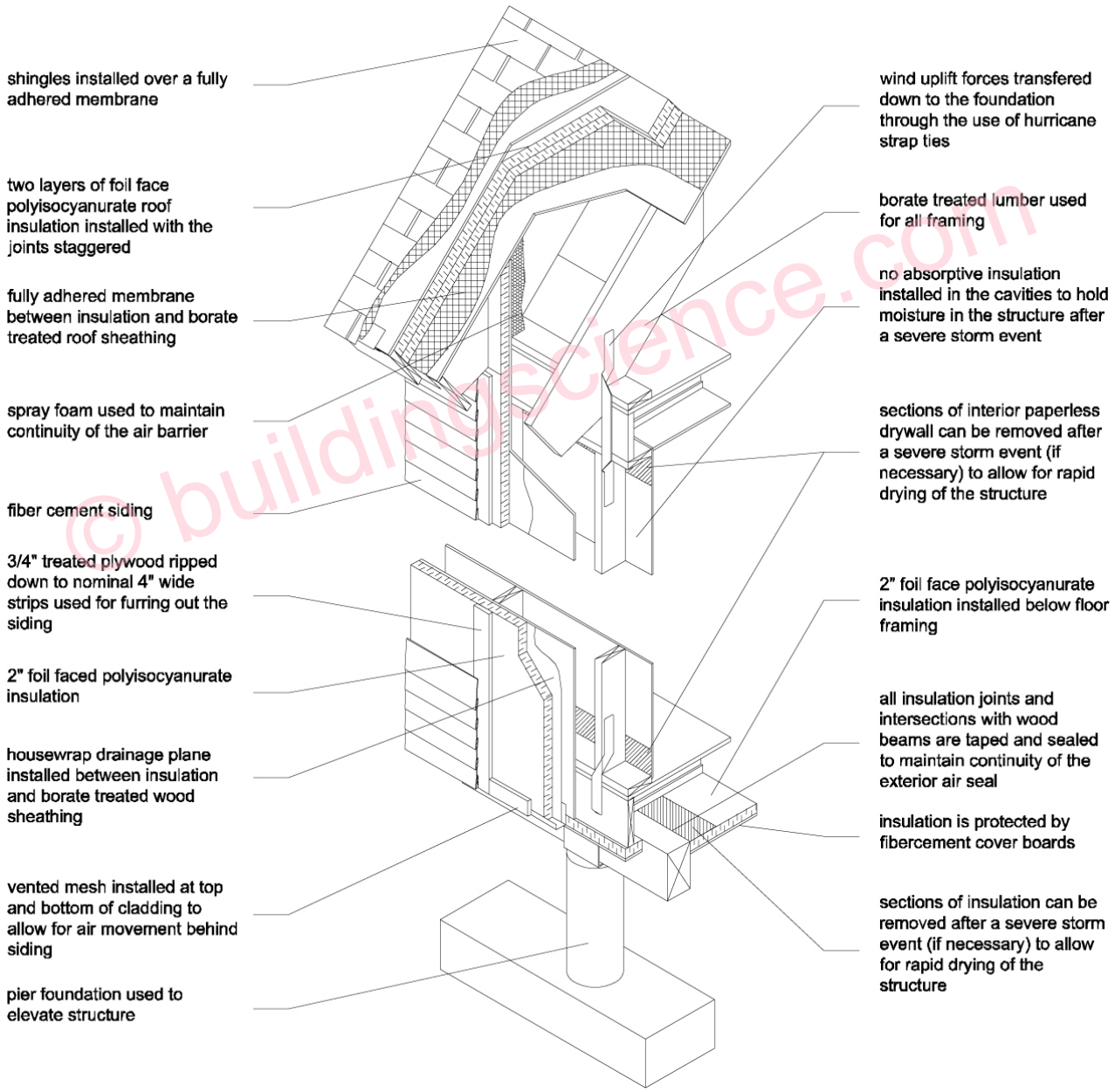

© buildingscience.com

Figure 4: Overall building section

Some simple strategies such as overhangs and porch coverings are an important aspect of the water management system. The two-foot overhangs protect the wall assemblies to some degree from getting wet during a storm, and the roof sheds collected rainwater out and away from the foundation. Keeping water off of walls, and more importantly the window assemblies, is significant in preventing water leakage into a home.

In general there are few additional materials used in the water management strategy not seen in standard practice: it is mostly design, detailing, construction sequence, and proper installation of materials that makes the difference.

One aspect of the design that departs significantly from standard practice is the installation of the fully adhered membrane underneath the shingle roofing. Common practice would only install roofing paper under asphalt shingles; however, when the shingles are blown off the building, building paper does not provide adequate protection, and there is nothing left to protect the structure from water infiltration. Shingles will be blown off a building during a hurricane; a fully adhered membrane will not. An additional layer of self-adhered membrane below the roof insulation provides some extra protection in the event that a portion of the upper roof sheathing and insulation is damaged or torn off during a hurricane.

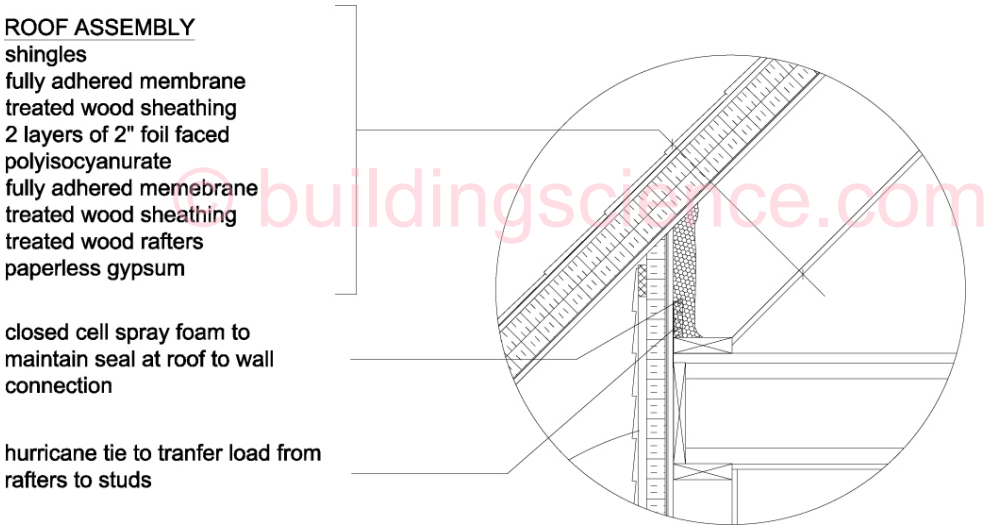

© buildingscience.com

Figure 5: Roof option 1

The installation of the fully adhered membrane on the exterior of the structure provides also for the air seal and vapor control layer to manage the inward drive of humid air from the exterior to the interior.

As a design alternative, spray foam insulation can be installed to the underside of the roof deck in lieu of the polyisocyanurate installed above the deck. Either closed cell spray foam or open cell spray foam can be installed in the rafter spaces to an adequate thickness to maintain the thermal resistance value.

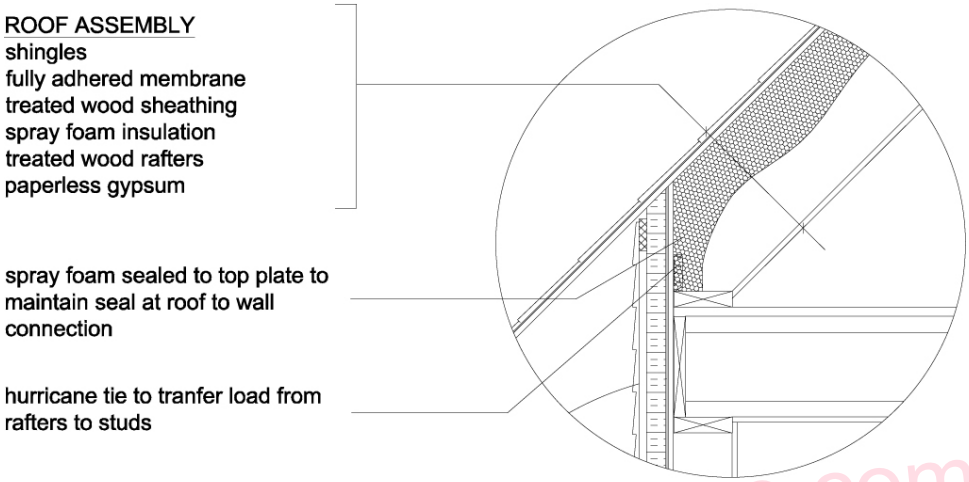

Figure 6: Roof option 2

© buildingscience.com

The wall assemblies are designed with a screened and drained (a.k.a. "rainscreen") cladding system installed on furring strips. A screened and drained cladding system is designed to shed most of the exterior rainwater off the front face of the cladding. Incidental moisture that gets past the exterior cladding is freely able to drain out of the wall assembly due to the cavity space created by the furring strips. The furring also creates an open space behind the cladding that allows for ventilation (back venting) of the cladding, resulting in enhanced drying of the wall assembly should wetting occur.

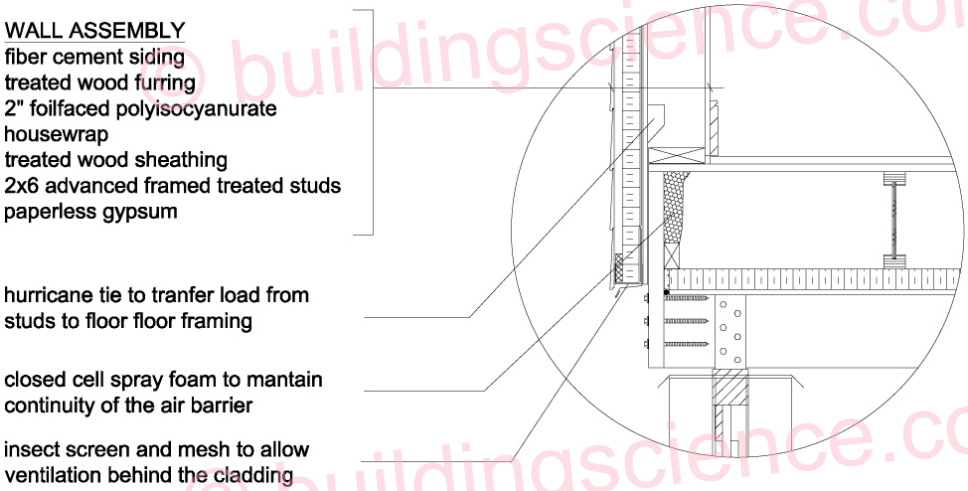

© buildingscience.com

Figure 7: Wall assembly

A continuous water resistant barrier or housewrap installed over the exterior sheathing is the drainage plane of the wall assembly. All other water management elements such as windows and flashings are tied into this drainage plane. All laps in the housewrap and flashings are installed in a shingle fashion to drain water down and out of the wall assembly. At the flashing details, incidental rain penetration is directed back out to the exterior of the wall assembly. While not its primary purpose, the foil-faced polyisocyanurate insulation provides some additional support and protection for the housewrap, and will act as an intermediate drainage plane between the cladding and the housewrap, further reducing the potential for moisture penetration.

The air barrier for the wall is maintained through the housewrap sandwiched between the exterior treated wood sheathing and the foil-faced polyisocyanurate. The foil-faced polyisocyanurate provides no only the thermal resistance for the wall but also acts as the vapor control layer managing the inward vapor drive from the high humidity exterior air.

The floor construction is the most susceptible to damage from flooding. The design looks to moisture resistant materials to be used with fiber cement protection board installed to cover the insulation. The taped foil faced polyisocyanurate acts both as the floor air barrier and vapor control layer managing the inward drive of high humidity exterior air.

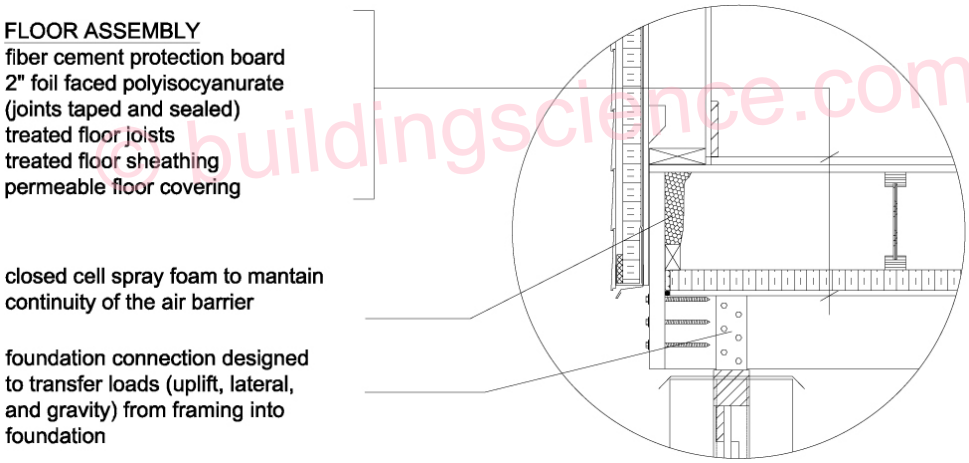

Figure 8: Floor option 1

© buildingscience.com

Similar to the roof assembly, the foil-faced polyisocyanurate can be replaced with closed cell spray foam provided that the floor finish installed over the subfloor is vapor semi-permeable. Open cell spray foam is not recommended for this application due to the high permeability of the material. With no exterior vapor control layer to prevent diffusion into the open cell spray foam, there is a concern of moisture accumulation under the floor material.

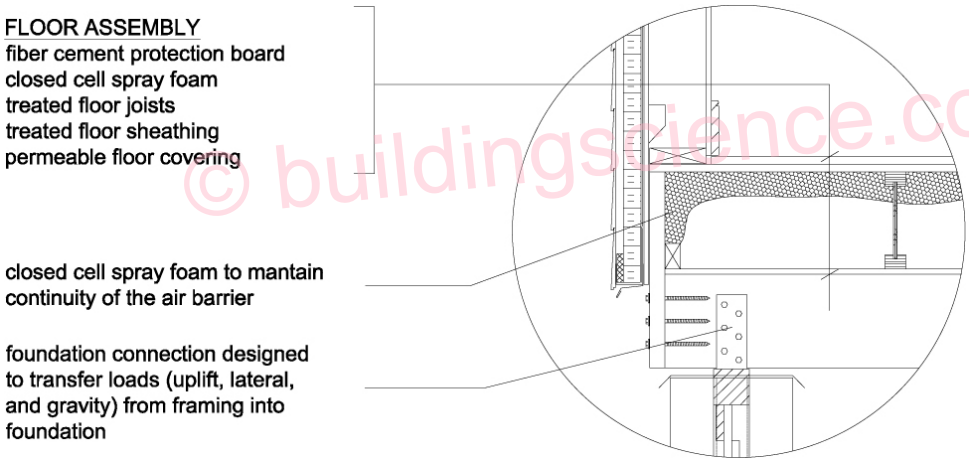

Figure 9: Floor option 2

Similar concerns exist with the installation of fiberglass batts to the underside of the floor sheathing with no exterior air barrier and vapor control layer. With the new adoption of the IBC and IRC Statewide in Louisiana, and the associated insulation requirements, insulating the floors of houses may lead to moisture problems in buildings if air leakage and vapor control is not addressed.

The windows are installed in a drained opening. The structure below the rough opening is protected by a pan flashing with a backdam, installed on the sill of the rough opening. The pan flashing is designed to collect any incidental water that penetrates through or around the window assembly and direct the water back out to the exterior. The window is integrated into the drainage plane of the wall by sealing the flanges of the window jambs to the housewrap drainage plane with a self-adhered flashing, and by overlapping the housewrap over the top of the head flange.

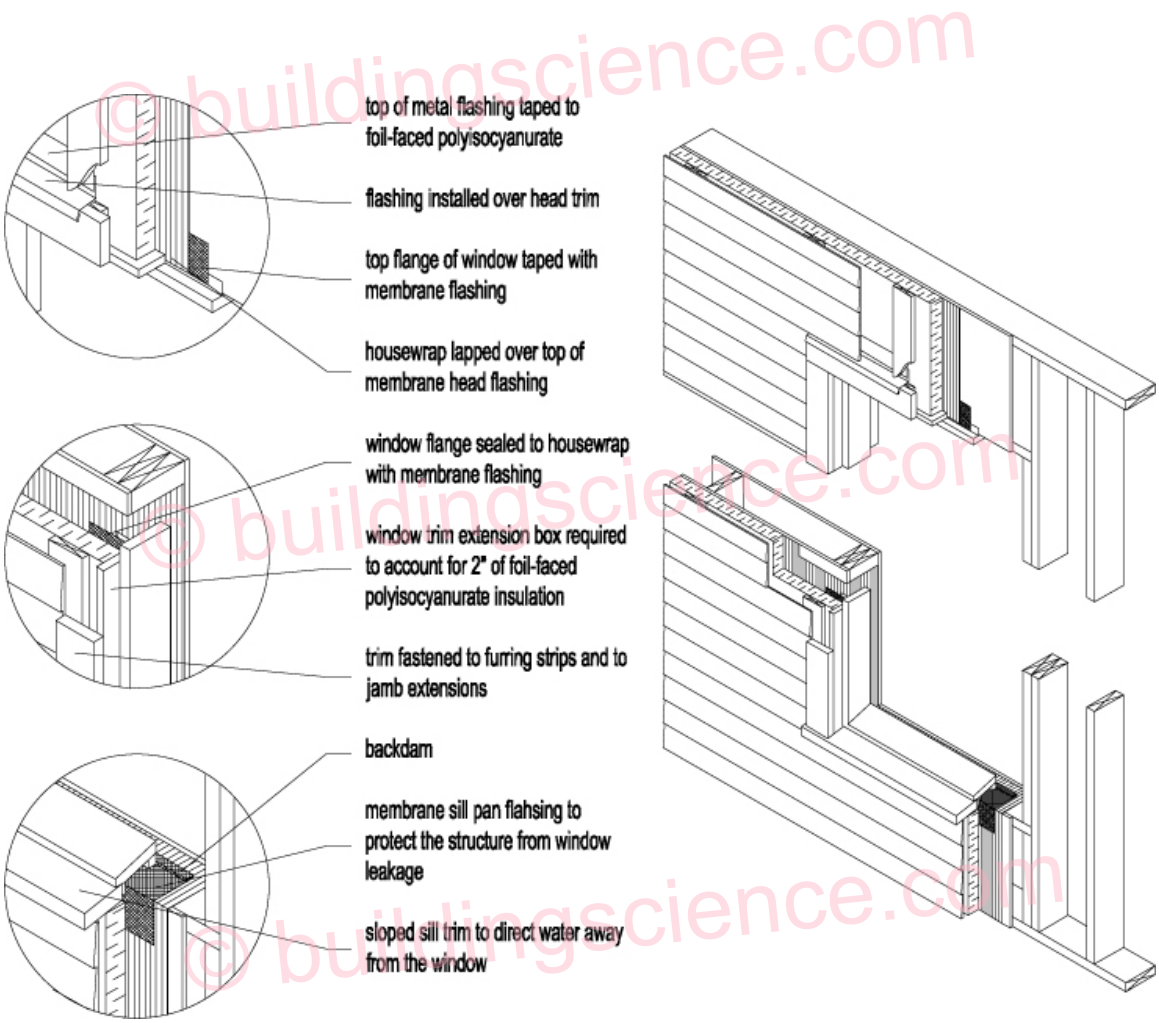

© buildingscience.com
© buildingscience.com
© buildingscience.com

Figure 10: Window installation details

The thickness of the exterior insulation requires that a trim extension box be installed around the window. This extension box covers the edge of the insulation, and provides for an addition surface for fastening the face trim.

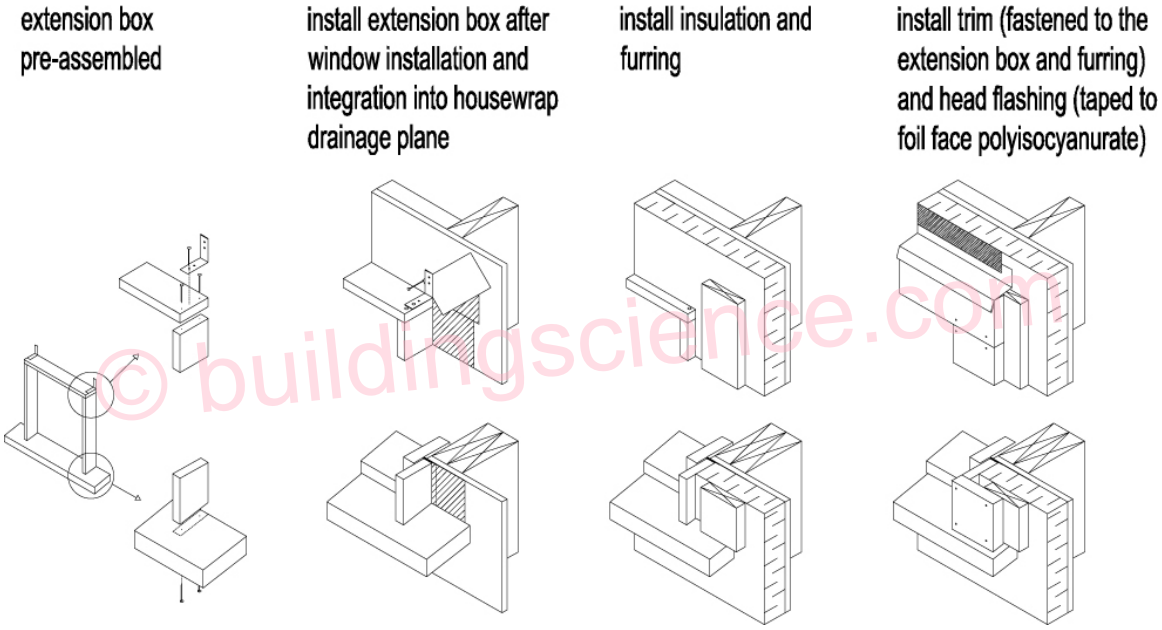

© buildingscience.com

Figure 11: Window trim extension box details

While other elements of the water management system have some intrinsic redundancy, the windows are more susceptible to damage, and are therefore a potential weak link in the water management system. To protect the windows during major storm events, impact resistant shutters are installed to protect the windows from airborne debris. Impact resistant glazing can be used as an alternate option, though the cost of the hurricane resistant glass is quite high.

Material Durability

A problem after Hurricane Katrina was not only the extensive moisture intrusion and flood damage suffered by houses, but that they were also left for a long time before people were able to get back to them to try to clean them up. With most of the interior finishes being susceptible to moisture, this resulted in a lot of material that had to be torn out and replaced. Building with moisture resistant materials provides a buffer for the home to stay wet for a longer period of time before materials begin to deteriorate.

The key changes are using of non paper-faced gypsum board, using of borate treated wood products, and replacing cavity insulation with exterior rigid insulation.

While gypsum itself is not totally susceptible to water damage, the paper facing of gypsum board is an ideal food source for mold. By using non-paper faced gypsum board, the food source that sustains mold growth is removed, thus making the product much more resistant to moisture damage.

All of the wood framing used in the home is borate treated material, which adds mold resistance. This treatment has the added benefits of protecting against insect damage such as from termites (a big problem in the Southeastern United States), and providing some fire resistance. A slight cost premium is incurred by using treated wood in the building. Though prices may vary, borate treated wood costs approximately 15% to 20% more that normal wood; however is less expensive than ACQ treated wood. Borate treated wood is recommended over ACQ treated wood for this application, as it is less corrosive and will prolong the life of the fasteners and connectors used in

the building. Compared to the potential cost of repair or replacement from water or termite damage, this is a reasonable cost for added durability.

Taking all necessary precautions to prevent water intrusion into a building can significantly reduce the potential for water damage; however under extreme storm conditions, even our best efforts may be compromised. It is somewhat unrealistic to expect that a home will have absolutely no water leakage given the extreme loading that is experienced during a hurricane or other major storm. Most cavity insulations will absorb or at least retain water in the cavity, making it very difficult to effectively dry the structure prior to material deterioration. Therefore, the cavity insulation is replaced with foil-faced polyisocyanurate rigid exterior insulating sheathing. Polyisocyanurate is moisture-resistant, so it is safe to place it outside of the housewrap drainage plane. Similarly, the roof insulation is also replaced by foil-faced polyisocyanurate.

Moving the insulation to the exterior allows the structure to be cleaned and dried out quickly and easily if water does leak into the building. With all of the insulation on the exterior of the structure and housewrap drainage plane, the wall stud cavities, floor framing, and roof framing are completely empty. After a storm event, strips of the paperless gypsum can be removed from the top and bottom of the cavities allowing for the cavity to be cleaned out (if needed) and quickly dried. Similarly, strips of the insulation under the floor framing can be removed to facilitate drying of the floor structure.

As an alternate, a non-absorptive insulation (such as closed cell spray foam) can be placed in the cavity and used in conjunction with or as a replacement for the foil faced polyisocyanurate installed exterior of the structure. This can be done with one provision: the cavity not be completely filled. In all cases in this design, at least a portion of the enclosed framing cavities need to be left open to allow for cleaning and drying of the stud space if flooding or water infiltration occurs during a major storm event.

Material Use

When designing a robust structure, it can be difficult to find savings in materials; however, with careful planning and design, material use can be optimized and waste generation can be significantly reduced.

Material savings are found in the structure through the use of advanced framing strategies for both the layout and framing. To take advantage of the common 4x8 foot sheathing dimension, the house is designed on a 2 foot grid pattern. Using a 2 foot layout reduces the amount of material waste from cutting odd dimensions, and saves labor and time. In addition, the framing (floor, walls, and roof) is spaced at 24 inches on center (o.c.) instead of 16 in o.c., and the elements are all stacked to provide direct load paths to the foundation.

Energy Efficiency

With a house designed to last for many years, achieving a high level of energy efficiency and reducing its long-term energy consumption is also an important goal for sustainability. Therefore, the house is designed to have a 30% reduction of source energy consumption when compared to the Benchmark standard of the Department of Energy's Building America Program.

Table 1: Building characteristics

		Benchmark Characteristics
	R-26 4" polyisocyanurate on roof deck (x2 2" layers)	Assembly U-value 0.042 (R-23.7 equivalent)
		Assembly U-value 0.085 (R-11.8 equivalent)
	R-13 2" polyisocyanurate under floor deck	Elevated foundation on piers Assembly U-value 0.07 (R-14.3 equivalent)
	U=0.37, SHGC=0.33	Metal Frame U=0.79, SHGC=0.65
	2.5 sq in leakage area per 100 sf envelope 839 CFM 50 (4.4 ACH 50)	1876 CFM 50 (9.75 ACH 50)
		6.8 HSPF Air Source Heat Pump
		10 SEER Air Source Heat Pump
		0.86 EF electric tank water heater
		R-3.3 ductwork in conditioned space
		15% (ducts located interior space-model limitation)
	Supply-only system integrated with AHU 43 CFM 10 minutes on; 20 minutes off	43 CFM @ 0.5 Watt/CFM (penalty elimination)
		n/a
		n/a

At the core of the energy efficient design is the building enclosure. Three aspects of the building enclosure that affect heat transfer are: insulation levels, air tightness, and window performance.

The walls are insulated to an effective R-13 through the use of a continuous 2” layer of foil-faced polyisocyanurate. As a comparison, a 2x6 wall with studs 16” o.c. filled with an R-19 batt would have an effective R-value of R-13 due to the thermal bridging of the framing members around the cavity insulation. The roof is insulated to an effective R-26 through the use of 2 layers of 2” foil-faced polyisocyanurate insulation. The floor is insulated to an effective R-13.

The key to building airtightness is to have a continuous air barrier, or a layer that controls air flow between interior and exterior: it is detailed in several ways. At the walls and roof, the air barrier is maintained by layering an air impermeable housewrap or fully adhered membrane between the treated sheathing and the insulation layer. The housewrap (or membrane) is the air barrier element that is structurally supported by both the sheathing and the insulation layer. For the floor, two air barrier planes exist: the first at the flooring, and the second at the taped insulation on the underside of the framing. At discontinuities, such as the roof to wall connection and around windows, spray foam is used connect the air barrier between the various elements. This approach has proven to be very effective in increasing the air tightness of buildings, and is estimated to achieve an air leakage rate of 2.5 in^2 per 100 ft^2 of enclosure area or better, when tested with a 50 Pa multipoint whole house depressurization test. Our experience has been that this goal is achievable, and a lower rate will typically be achieved (around 1.5 in^2 per 100 ft^2 of enclosure area).

In hot humid climates, reducing heat gain through the windows is critical. Gains can be reduced by maximizing the insulation value (i.e., having a low U value) and minimizing the solar heat gain coefficient (SHGC) of the window. Therefore, the specified units are spectrally selective Low-E^2 windows with an approximate U-value of 0.37 and SHGC of 0.33.

One key aspect of the mechanical system is that the air conditioning system is "right-sized," or sized tightly to the calculated cooling load. This lowers the cost of the equipment, reduces short cycling (thus increasing efficiency), and enhances dehumidification due to increased run time. In cooling-dominated climates, the efficiency of the cooling equipment is an important factor: a 14 SEER air source heat pump is specified.

A common cause of energy loss for homes is the placement of the air handler and ductwork in the attic or elsewhere outside of the conditioned space. To eliminate this loss, which can be quite significant, the air handler and all of the ductwork is placed inside the conditioned space.

With energy efficient and leak free enclosures, controlled mechanical ventilation is important to maintain good indoor air quality. To provide an effective supply of outdoor air to all areas of the home, a supply-only system that is integrated with the space conditioning system is used. With this approach, outdoor air is introduced into the home through a 6-inch duct connected to the return side of the air handler. Through the use of a fan cycling control, the air handler is run intermittently, drawing in outdoor air and distributing it throughout the house. An electrically-operated damper is used the prevent over ventilation during peak load periods.

One trade off to all of the energy efficiency upgrades is the need to provide supplemental dehumidification in the New Orleans area. Reducing the loads on the homes reduces the need for air conditioning, which in turn reduces the ability of the cooling system to reduce interior humidity levels. As a precaution, a dehumidifier is installed in the house to address these potentially higher humidity levels.

This plan was modeled with the residential energy simulation EnergyGauge USA, to examine the energy consumption reductions relative to the Building America Benchmark standard. Unlike other modeling protocols, this standard measures whole house energy use—not just heating, cooling, and hot water. Lighting, plug loads, and appliance loads are all included in the energy analysis.

Table 2: Percentage of Energy Consumption Reduction Compared to BA Benchmark

Description of change			Total Savings over BA Benchmark	Incremental Savings Over Benchmark	Estimated Annual Energy Cost*
Benchmark			n/a	n/a	$1,794
Windows as-designed, w. overhangs			2.1%	2.1%	$1,740
Air seal			5.3%	3.2%	$1,655
Ducts 5% leakage and in conditioned space			9.0%	3.7%	$1,618
2" polyiso (R-13) walls; R-2 low-E airspace			10.7%	1.7%	$1,586
4" polyiso R-26 roof			10.9%	0.2%	$1,583
2" polyiso R-13 pier foundation			10.8%	-0.1%	$1,586
All windows Low-E²			13.5%	2.8%	$1,537
ASHP: 14 SEER / 8.5 HSPF			20.1%	6.6%	$1,419
0.94 EF water heater			22.0%	1.8%	$1,386
CFL Lighting Package			28.5%	6.6%	$1,270
Energy Star Appliances			33.8%	5.3%	$1,174

The energy bill reduction for this house plan when compared to the Building America Benchmark Protocol represents an approximate $620/year reduction.

* Electricity: $0.05078/kWh energy charge + 6 cents/kWh fuel adjustment = 11 cents/kWh
Gas: $0.1903/CCF basic rate gas + ~$1.00/CCF Purchased gas adjustment = $1.20/CCF

Costs

Since the International Building Code and International Residential Code (IBC and IRC) are being adopted statewide in Louisiana, new code-compliant construction is likely to increase the base costs of homes being built in New Orleans. These changes are a move in the right direction, because certain measures (e.g., upgraded structural design) will significantly improve the durability and safety of new buildings in New Orleans, and reduce the damage in future storm events.

Currently, it is expected that houses built in compliance with the newly adopted building code for LA will cost approximately $10,000-$15,000 more than typical New Orleans construction prior to Hurricane Katrina. This increase represents the new baseline of code compliant construction for the area.

The durability design upgrades beyond the minimum building code requirements have resulted in additional costs in this project. The initial capital costs associated with the over-code sustainability upgrades is again estimated at $10,000 to $15,000 more than standard construction would cost based on a preliminary cost analysis. However, these upgrades can be viewed as an investment.

Table 3: Estimated Cost Breakdown For Durability and Energy Efficiency Upgrades

	ICC Code Compliant		Building America Prototype	
Structure		Cost Difference		Cost Difference
Foundation	Raised Pier	$ 7,000.00	Raised Pier	$ -
Hurricane Ties	Prescriptive	$ 2,500.00	Engineered	$ -
Sheathing/Cladding Attachment	Prescriptive	$ 1,000.00	Engineered	$ -
Water management				
Roof	Shingles over Building Paper	$ -	Shingles over Fully Adhered Membrane	$ 1,500.00
Wall	Siding over Houswrap	$ -	Siding w/ furring over Housewrap + Integrated Flashings	$ 150.00
Windows	Protected Opening	$ -	Drained Window Membrane Flashed with Housewrap	$ 150.00
Material Durability				
Wood framing	Untreated	$ -	Borate Treated	$ 1,500.00
Gypsum	Paper Faced	$ -	Non-Paper Faced	$ 1,800.00
Insulation	Cavity Fill	$ -	Exterior Rigid Polyiso and/or Closed Cell SPF	cost reflected in energy section
Material Use				
Framing	2x4 Standard	$ -	2x6 Advanced Framed	$ (500.00)
Sheathing	3/4" roof, 3/4" floor, 1/2" wall	$ -	3/4" roof x 2, 7/8" floor, 1/2" wall	$ 2,200.00
Energy				
Ceiling Insulation	Batt Insulation R-value R-30 (0.035 U value)	$ -	R-26 4" polyisocyanurate on roof deck (x2 2" layers)	$ 1,500.00
Wall Insulation	Batt cavity fill R-value R-13 (0.082 U value)	$ -	R-13 2" polyisocyanurate on 2x6 walls	$ 1,000.00
Floor Insulation	Batt Insulation R-value R-13 (0.064 U value)-is this correct?	$ 600.00	R-13 2" polyisocyanurate under floor deck	$ 200.00
Windows	U=0.75 or less; SHGC=0.40 or less	$ -	Double Pane Vinyl Spectrally Selective LoE², U=0.37, SHGC=0.33 (General Aluminum Vinyl)	$ 700.00
Infiltration	n/a	$ -	2.5 sq in leakage area per 100 sf envelope, 839 CFM 50 (4.4 ACH 50)	$ 500.00
Heat	no requirements stated (7.7-8.5 HSPF matches 13 SEER)	combined with cooling	8.25 HSPF Air Source Heat Pump	combined with cooling
Cooling	no requirements stated (13 SEER minimum US)	$ -	14 SEER Air Source Heat Pump	$ 500.00
DHW	no requirements stated	$ -	0.94 EF electric tank water heater	$ 300.00
Ducts	IECC calls for R-8 exterior duct; implementing R-6	$ -	R-6 flex runouts in conditioned space	$ -
Leakage	Exception for ducts located within conditioned space	$ -	none to outside (5% or less)	$ -
Ventilation	none	$ -	Aprilaire VCS 8126 Supply-only system integrated with AHU, 43 CFM 33% Duty Cycle: 10 minutes on; 20 minutes off	$ 200.00
Return Pathways	n/a	$ -	Transfer grilles/jump ducts at bedrooms	$ 200.00
Dehumidification	n/a	$ -	Dehumidifier	$ 300.00
Lighting	Incandescent	$ -	90% CFL (10% Incandenscent)	$ 100.00
Incidental Cost				
Window Trim	Standard	$ -	Extended Box	$ 500.00
		$ 11,100.00		**$ 12,800.00**

Looking at the value of the initial capital cost over a 30-year term compared to the escalation rate of energy shows that the annual energy savings will exceed the annual mortgage payments in 8 to 13 years.

An example is shown below, using the following assumptions:

- $13,000 initial mortgage difference
- 30-year mortgage
- 7.0% interest rate
- Utility cost reduction of $620 (present day dollars)
- 5.0% energy escalation rate (over the past 20 years the energy escalation rate has been closer to 7.0%)

Given these starting values, utility bill savings will be greater than the monthly loan payments after 11 years.

Table 4: Annual Payment vs. Energy Savings

Year	Annual Payment	Annual Energy Savings	Net Savings
1	$1,048	$620	-$428
2	$1,048	$651	-$397
3	$1,048	$683	-$364
4	$1,048	$718	-$330
5	$1,048	$753	-$294
6	$1,048	$791	-$257
7	$1,048	$831	-$217
8	$1,048	$872	-$175
9	$1,048	$916	-$132
10	$1,048	$962	-$86
11	$1,048	$1,010	-$38
12	$1,048	$1,060	$13
13	$1,048	$1,113	$66
14	$1,048	$1,169	$121
15	$1,048	$1,227	$180
16	$1,048	$1,289	$241
17	$1,048	$1,353	$305
18	$1,048	$1,421	$373
19	$1,048	$1,492	$444
20	$1,048	$1,566	$519
21	$1,048	$1,645	$597
22	$1,048	$1,727	$679
23	$1,048	$1,813	$766
24	$1,048	$1,904	$856
25	$1,048	$1,999	$951
26	$1,048	$2,099	$1,051
27	$1,048	$2,204	$1,156
28	$1,048	$2,314	$1,267
29	$1,048	$2,430	$1,382
30	$1,048	$2,551	$1,504

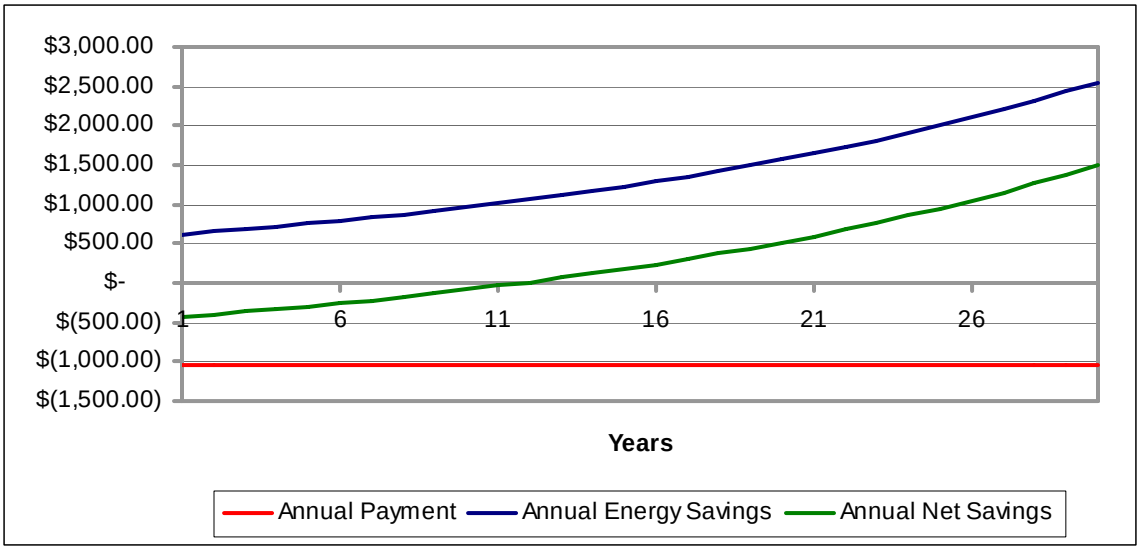

Figure 12: Annual Payment vs. Energy Savings

Conclusion

In light of the devastation that occurred after Hurricane Katrina hit New Orleans, designing homes with durability and energy efficiency in mind is important. This house, designed to be able to withstand the high loads of hurricane storms and allow for quick recovery to minimize the disruption to peoples' lives, adds a certain amount of insurance to the people living in hurricane-prone zones. While there is an initial cost to implementing these upgrades, the costs are small compared to the cost of starting all over again. In addition, the cost of these upgrades can be compared to their annual energy saving dollar value. Assuming a lower-than-normal energy escalation rate, utility bill savings will be greater than the monthly loan payments after 11 years.

About this Report

This report was prepared with the cooperation of the U.S. Department of Energy's, Building America Program.

About the Authors

Peter Baker, P.Eng., is an associate engineer at Building Science Corporation in Westford, Massachusetts. More information about Peter Baker can be found at www.buildingscience.com.

Direct all correspondence to: Building Science Corporation, 30 Forest Street, Somerville, MA 02143.

Limits of Liability and Disclaimer of Warranty:

Building Science documents are intended for professionals. The author and the publisher of this article have used their best efforts to provide accurate and authoritative information in regard to the subject matter covered. The author and publisher make no warranty of any kind, expressed or implied, with regard to the information contained in this article.

The information presented in this article must be used with care by professionals who understand the implications of what they are doing. If professional advice or other expert assistance is required, the services of a competent professional shall be sought. The author and publisher shall not be liable in the event of incidental or consequential damages in connection with, or arising from, the use of the information contained within this Building Science document.