Advanced Thermoelectric Materials for Efficient Waste Heat Recovery in Process Industries

U.S. Department of Energy
Industrial Materials for the Future

PPG, OI, Alchas, MTU, Alcoa & PNNL

June 1, 2005

PPG Flat Glass & Fiber Glass

- North America: Approximately 40 Flat Glass Lines.
- PPG Operates 10 Flat Glass lines at six locations.
- All but three of the North American Flat Glass lines uses the Siemens Regenerative Process.

Siemens Regenerative Process

400-800 TPD, 3-5 MW, 125-250 MMBTU/hr

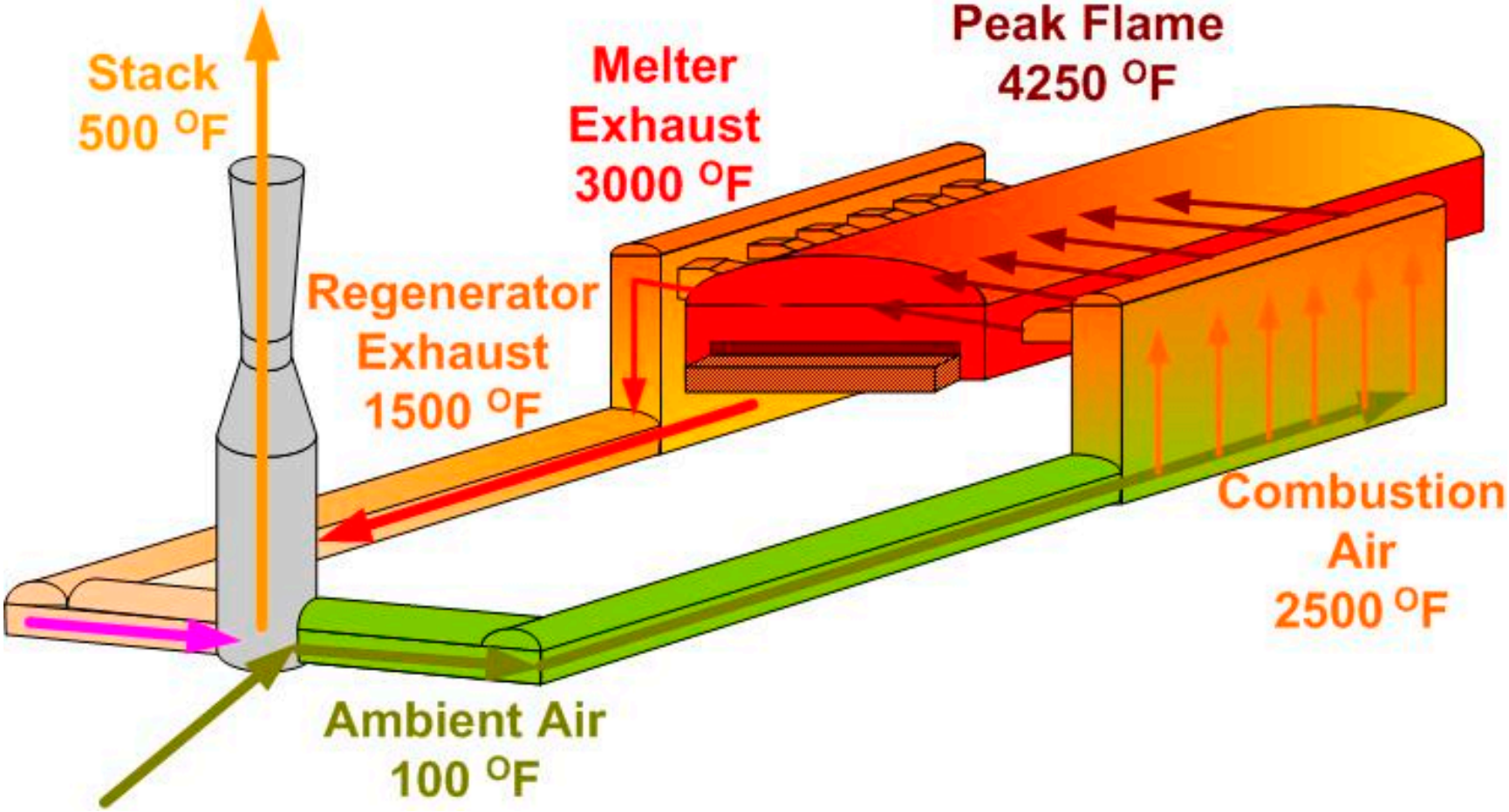

PPG Oxy-Fuel Float Glass Melter

- 1998 LOF Starts up first Oxy-Fuel Melter.
- 2000 PPG Starts up Fresno 15-2 OFM.
  - Primary driver was to reduce NO_X emissions.
  - Increased throughput, quality and efficiency.
- 2002 PPG Starts up Meadville 8-1 OFM
  - New designed realized further improvements in efficiency.

PPG Oxy-Fuel Melter

Increased TPD, decreased BTU's, +3-5 MW

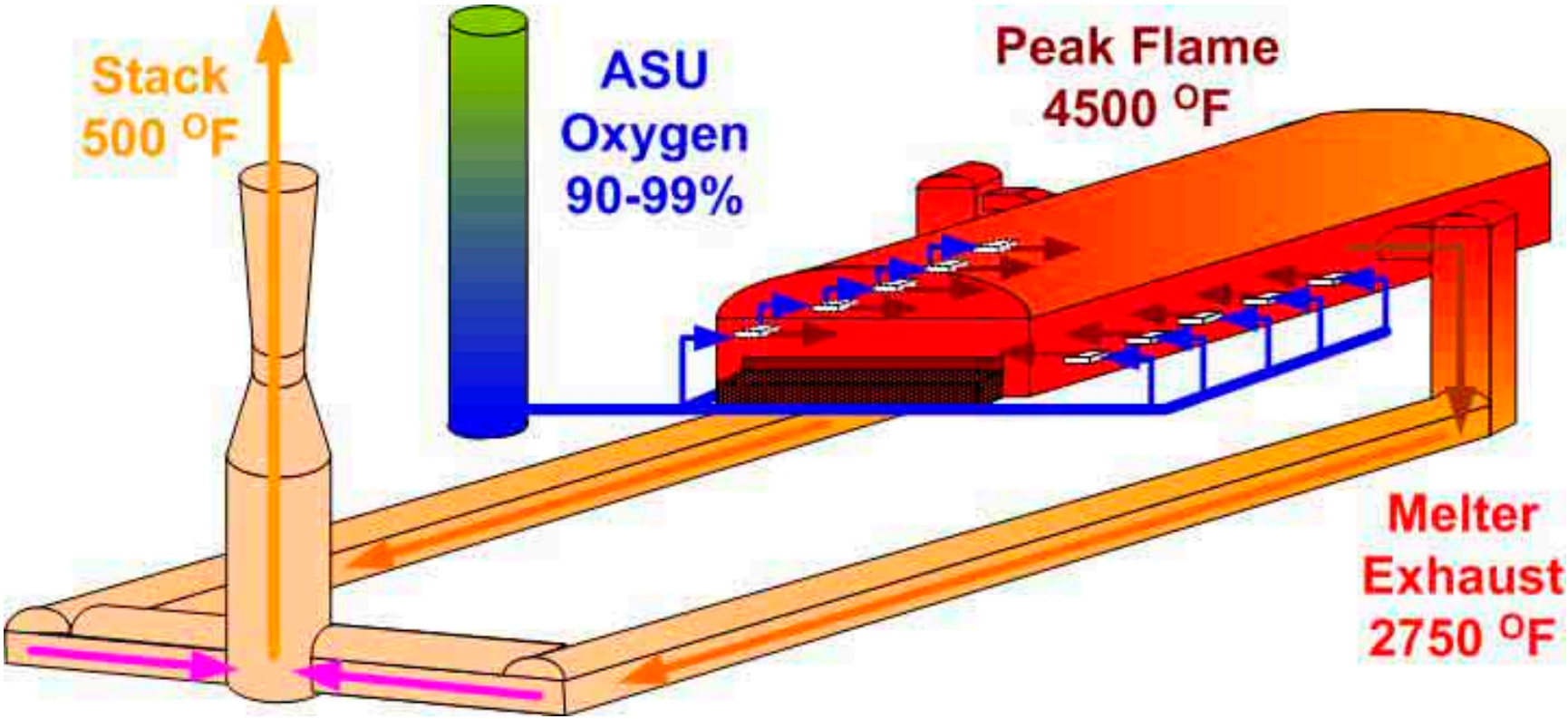

Current Technology
Steam-Turbine or Oil-Freon

- Current technology is approximately 9% efficient in converting waste heat to electricity = 1.5 MW.
- Requires significant exhaust re-design and potential maintenance issues due to condensates
- Pay-back period is 4-8 years

PPG & Industrial Partners Objectives

- Equal or higher conversion efficiencies (ideally 25% to supply oxygen plant).
- Solid state (direct conversion).
- Adaptable to existing and varied exhaust systems.
- Lower cost (a payback of less than three years).

Oxy-Fuel
Exhaust Mass and Energy Balance
September/October 2000

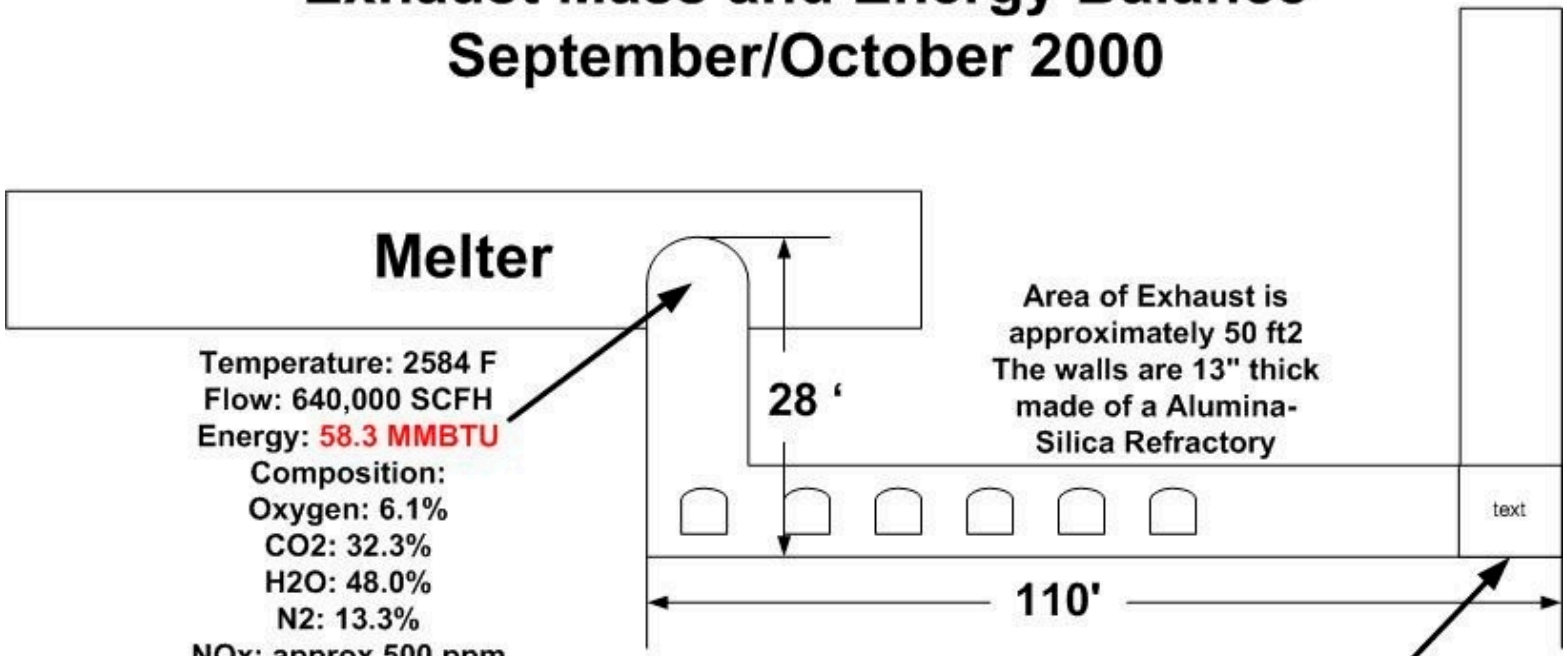

Temperature: 2584 F
Flow: 640,000 SCFH
Energy: 58.3 MMBTU
Composition:
Oxygen: 6.1%
CO_2: 32.3%
H_2O: 48.0%
N_2: 13.3%
NOx: approx 500 ppm
CxHx: approx 2000 ppm
CO: approx 4000 ppm
SO_2: ?
Also various Sulfate Particulates

Area of Exhaust is approximately 50 ft2
The walls are 13" thick made of a Alumina-Silica Refractory

Temperature: 752 F
Flow: 3,056,000 SCFH
Energy: 50.2 MMBTU
Composition:
Oxygen: 17.25 %
CO_2: 6.8 %
H_2O: 12.7 %
N_2: 62.9 %
NOx < 150 ppm
CxHx < 500 ppm
CO < 1000 ppm
SO_2 < 50 ppm

Objective

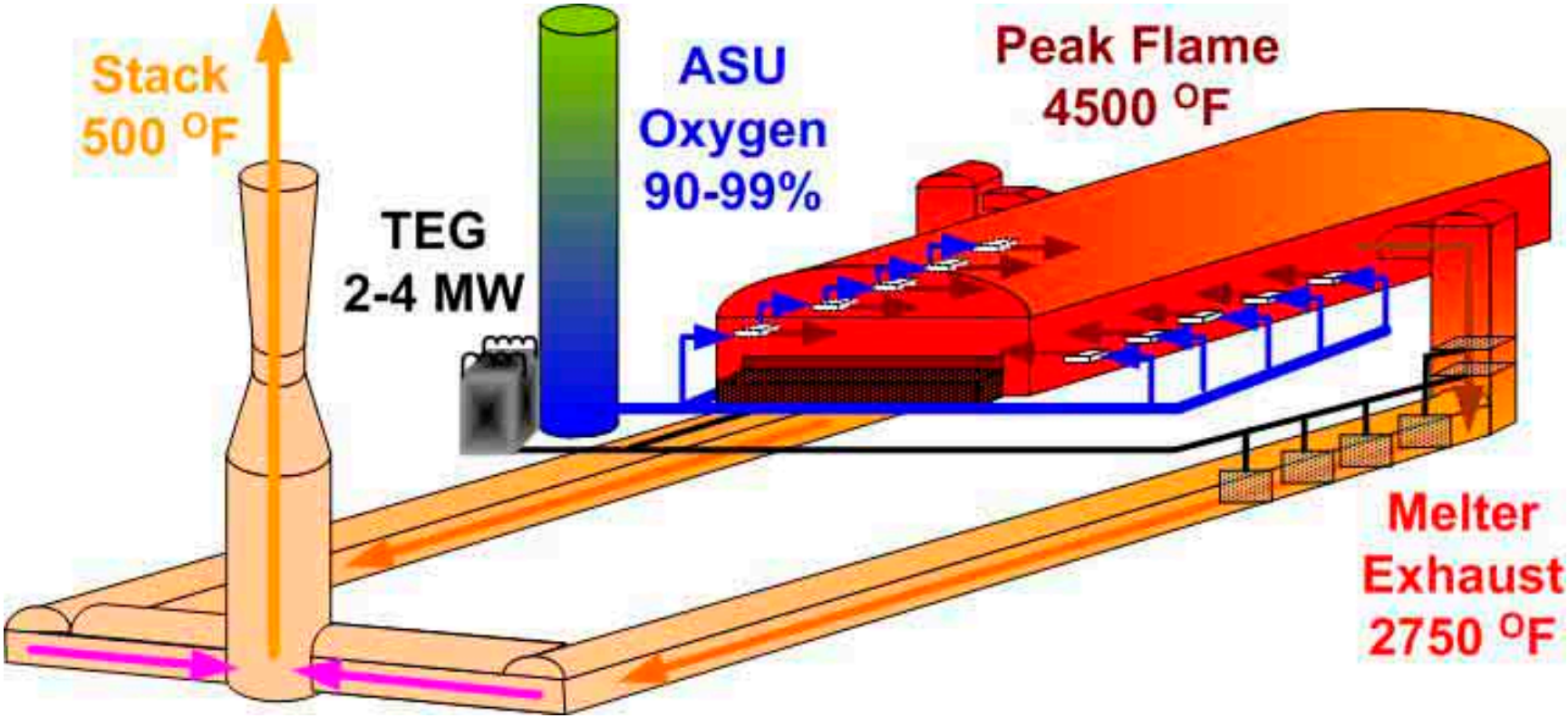
Stack
500 °F
TEG
2-4 MW
ASU
Oxygen
90-99%
Peak Flame
4500 °F
Melter
Exhaust
2750 °F

Advanced Thermoelectric Materials for Efficient Waste Heat Recovery in Process Industries: PNNL Program

U.S. Department of Energy
Industrial Materials for the Future
Annual Review

June 1, 2005

Battelle PPG OI MichiganTech ALCOA Pacific Northwest National Laboratory U.S. Department of Energy

Thermoelectric Energy Conversion

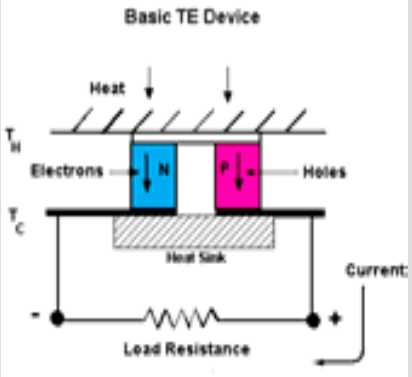

TE Material Parameters

- Electrical Conductivity (σ)
- Seebeck Coefficient (S)
- Thermal Conductivity (K)

Ideal Conversion Efficiency

- Can be Written as a Function of ZT
- ZT is Dimensionless and

$$= [S^2 \sigma / K] T$$

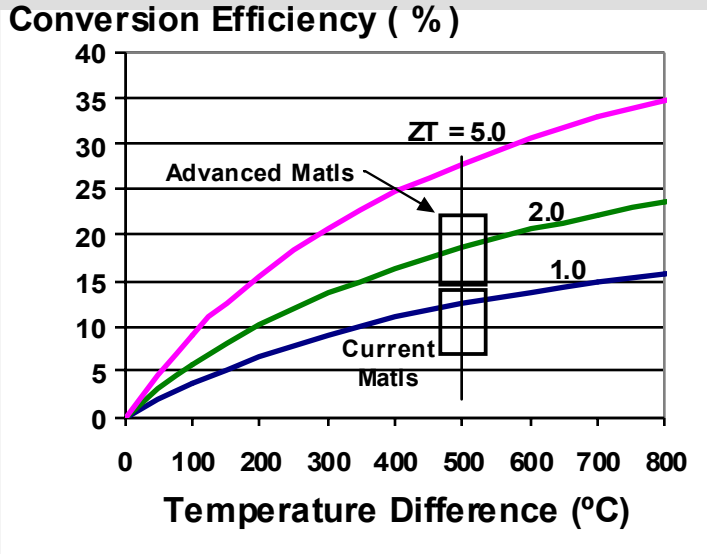

Current and Advanced Materials

- Current Materials: PbTe, Bi_2Te_3, and Others in Bulk Form
- Advanced Materials: Nanostructure Materials

3 Year Program Plan

Tasks	FY04	FY05	FY06	FY07
1. Energy Conversion System Design	PbTe TEG	Adv Materials & Heat Exchange		
	Economic Analysis		Update Economic Analysis	
2. TE Generator Testing & In-Plant Demonstration	TEG Test Bed (PNNL)			
	In-Plant Demo At PPG		6 %	10 % 20 %
3. Combustion Emission Optimization		Condensate Characterization		
4. Advanced TE Materials Development	Advanced TE Films		ZT = 2, T < 1000°F	Approach for T > 1000°F
			Scale-Up	

Battelle PPG OI MichiganTech ALCOA Pacific Northwest National Laboratory U.S. Department of Energy

General Schematic of In-Plant Demonstration

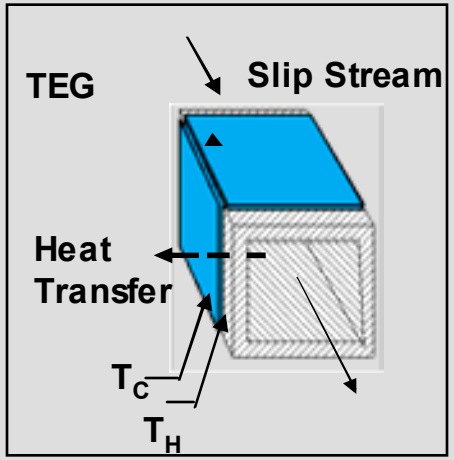

Representative In-Plant Conditions:

- Energy Flow ~ 60 MMBtu/hr
- Gas Flow ~ 640,000 SCFH
- Temperature ~ 2600ºF

Negative Pressure

Slip Stream

TE Generator

Temp, Press Measurements

Cooling Air

Compressed Air Ejector

Furnace Exhaust

Current Technology Generator for Initial Studies

- Produced by Global Thermoelectric
- Utilizes PbTe Thermoelements
- Readily Available (1000 Units/ Yr)
- $ 2500 / Unit
- 350 Watts With T_H = 1000°F (535°C)
  T_C = 100°F (38°C)

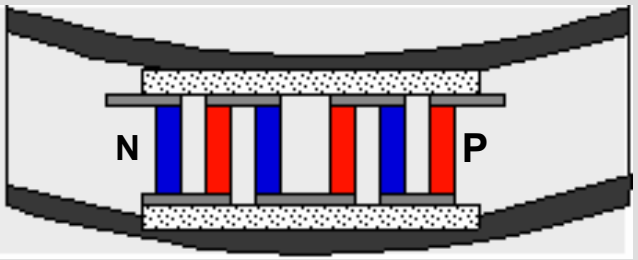

Thermoelements In Radial Configuration Placed Around the Circumference

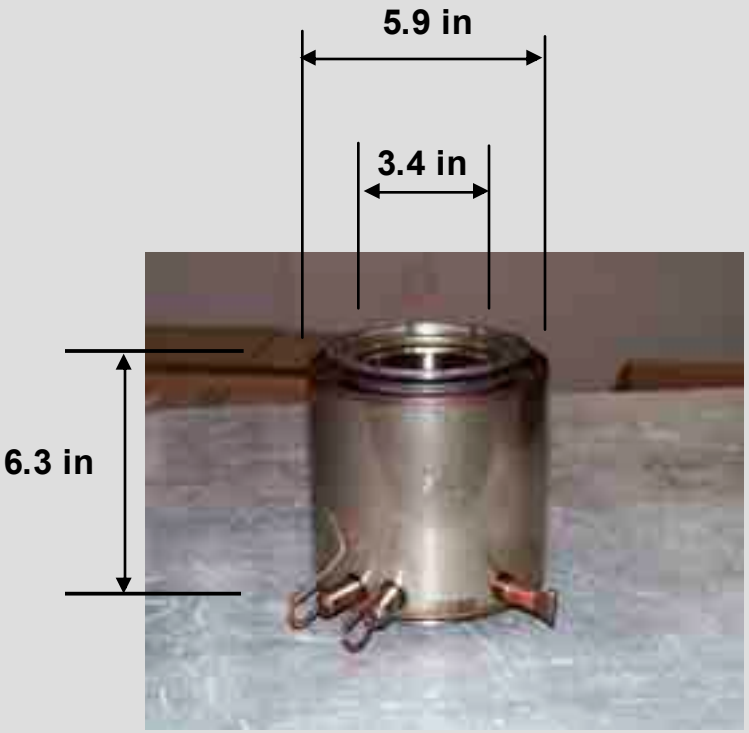

Energy Balance Across Converter

Modeling Approach

Known Information:

- TEG dimensions
- P_1 and T_1
- Assumed gas is air
- % Furnace Exhaust

Objectives of Modeling:

- h values that give radial heat transfer that match calculated values of enthalpy extracted from gas stream
- Tolerable ΔP

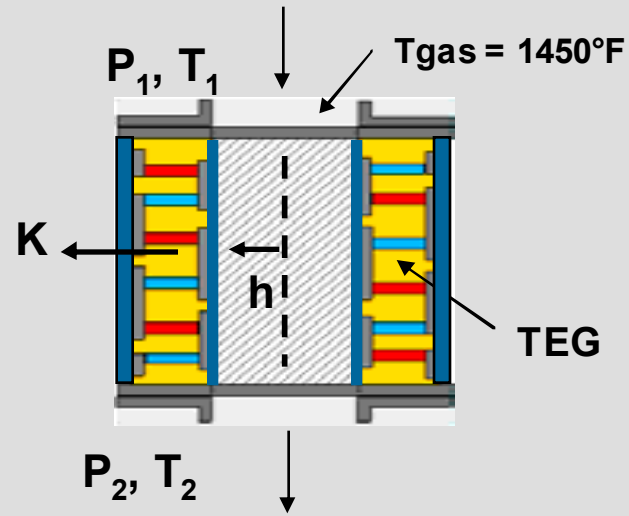

PNNL Test Bed Configuration

Design Objectives

- Provide a Test Bed for Acquiring Required Information for In-Plant Testing
- Allow Simulation of Slip Stream Available in PPG Meadville Plant
- Allow Testing of TEGs Based on Advanced Materials

PNNL Test Bed

- Utilizes Eclipse Combustion System
- Fired By Natural Gas Combustion
- Can Deliver Up To 2 Million BTU/hr (585 kW)
- Flow Rate Up To 1000 SCFM

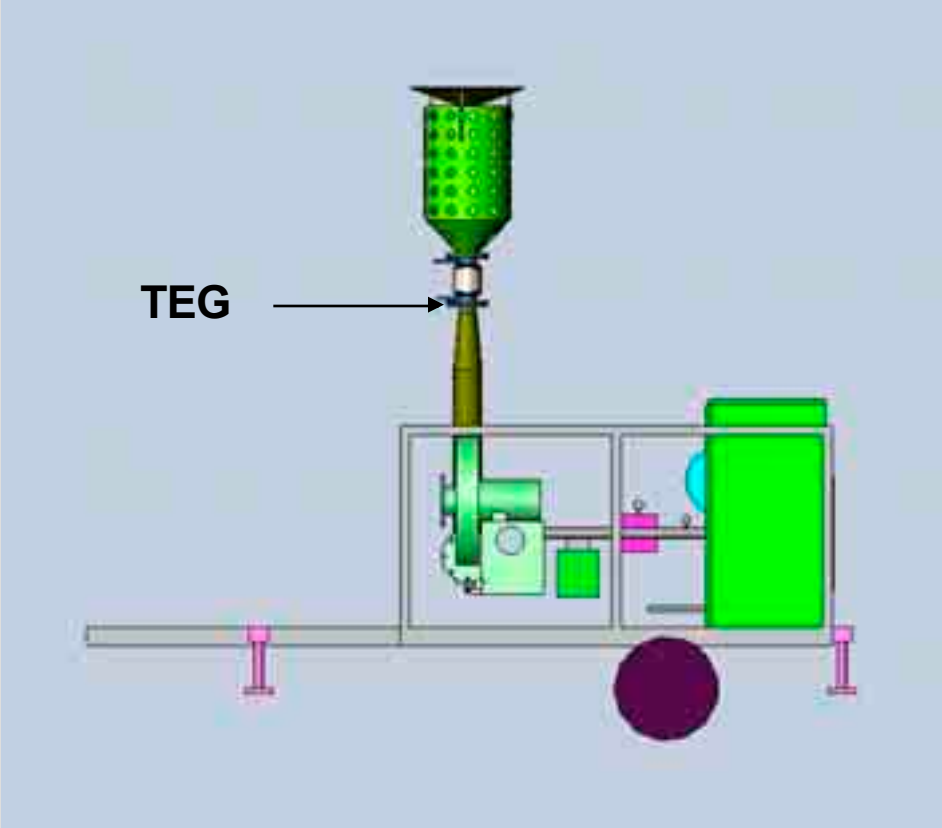

Comparison of PNNL Test Bed and Meadville PPG In-Plant Test

PPG In-Plant Study	PNNL Test Bed
1. Aspirated Flow	Pressurized Flow with Blower
2. Off Gas with High H2O Content and Other Components	Air and Natural Gas Combustion
3. 1450°F at Entrance of TEG	Same
4. Need to Manage Condensates	None
5. Measured Quantities: - Current vs Voltage - Temperature at Entrance and Exit - Pressure at Entrance & Exit - Temperature at Cold Surface - Temperature difference and Mass Flow Rate of Coolant	Same

Test Bed Results

- Global 7120 TEG produced 260 W_E with 323 °C hot junction temperature
  - -- Artifact of water calorimeter that held device below design range
  - -- Indicates TEG will achieve design output without water jacket
- Heat energy intercepted by TEG was 4.7kW_T
- Estimated value of heat transfer from gas to hot junction 212 W/m^2-°C
  - -- Agrees with theoretical range 200 to 400 W/m^2-°C between gas and interior of duct only
- Overall heat-to-electricity conversion efficiency 5.5%
  - -- representing ~ 10% above expected, benefit of water jacket
- Average gas temperature in TEG section 936 °C (1717 °F)
  - -- Exceeded theoretical design point of 1450 °F (subject to further review)
- Axial pressure differential in TEG - 8 inches H_2O
  - -- Four times theoretical value attributable to mantle design

Advanced TE Materials

Boron / Boron Carbide Multilayers

- Multi-layer films grown by RF magnetron sputtering from B_4C and B_9C Targets
- Best results require single crystal silicon substrates and annealing at 1000ºC

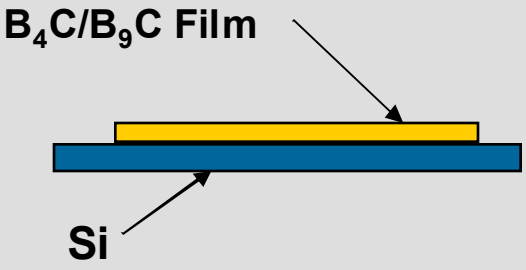

Si/SiGe Multilayers

- Multi-layer grown by RF magnetron sputtering from Si and SiGe Targets
- Best results require single crystal silicon substrates

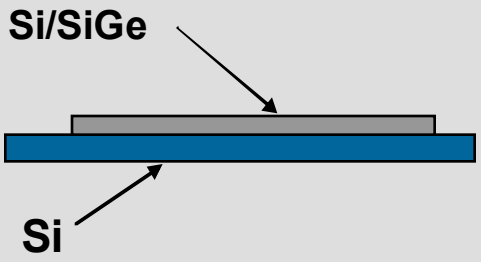

PbTe, $AgSbTe_2$ and Alloys

- Films grown by RF magnetron sputtering from two or three targets
- Films can be deposited on variety of substrates

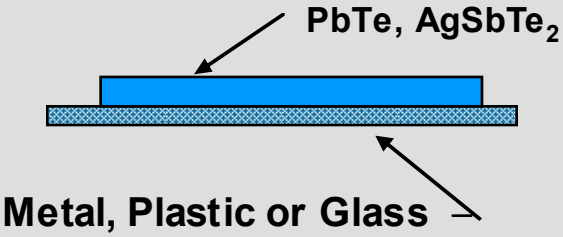

Thermoelectric Materials Development

- Utilize Magnetron Sputtering
- Can Mix Three Components
- Substrate temperatures up to 800ºC
- Layered Materials Are Grown By Rotating Substrates Over Targets
- Approach Allows Investigation of A Broad Spectrum Of Materials In A In A Timely Manner

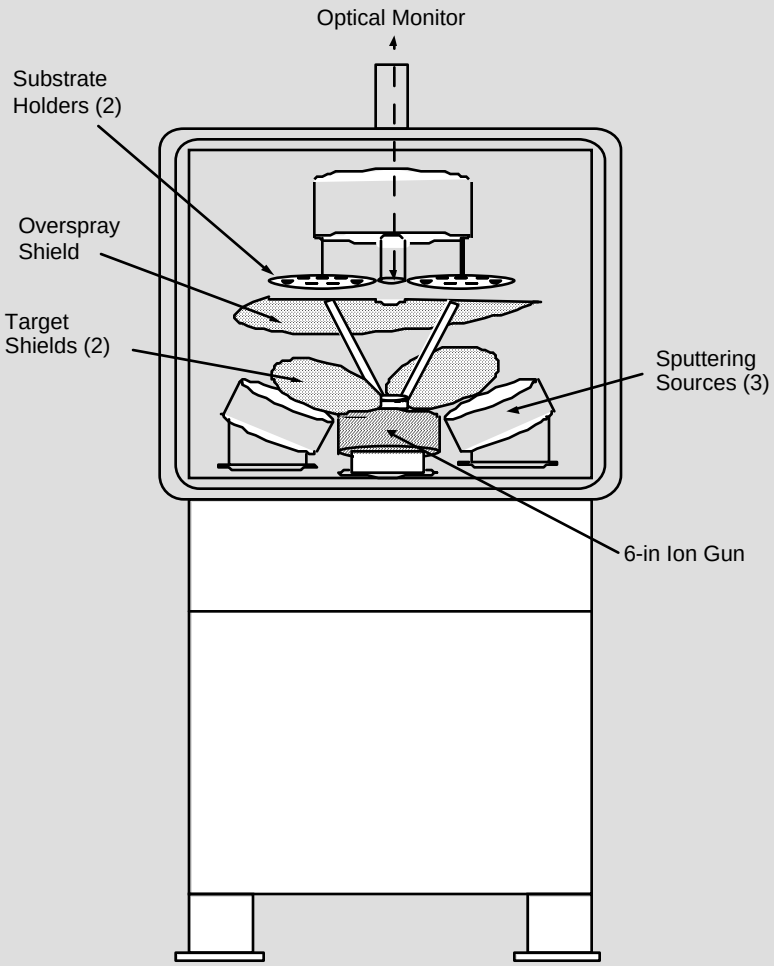

PbTe Based Alloys: Electrical properties

Results for Ag-PbTe Films

Seebeck Coefficient $= \dfrac{\Delta V}{\Delta T}$

Electrical Conductivity $= 1/\rho$

$R = \rho L/A$

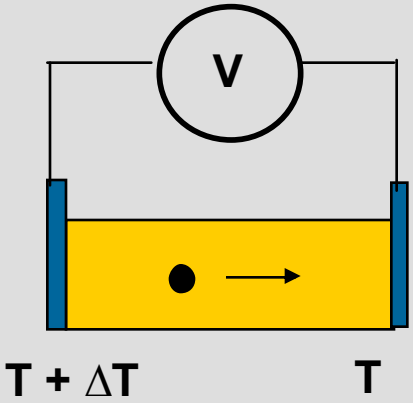

Seebeck Coefficient (µV/ºC)

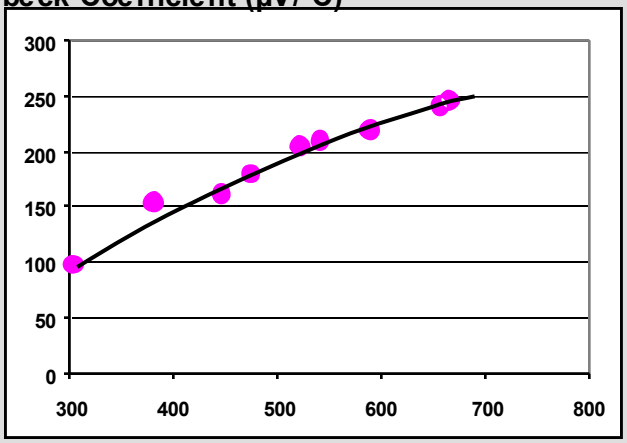

Temperature (ºK)

Electrical Conductivity

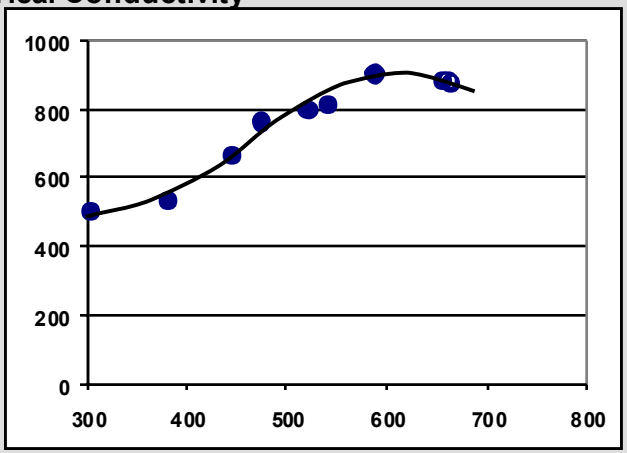

PbTe Alloys: Figure of Merit

Results for Ag-PbTe Films

Efficiency = fct (ZT)

$$ZT = S^2 T/(\rho\kappa)$$

$$= \frac{[S^2T/\rho]}{\kappa}$$

ZT Values Assume

κ = .01 W/cm/ºC
And .015 W/cm/ºC

Figure of Merit (ZT)

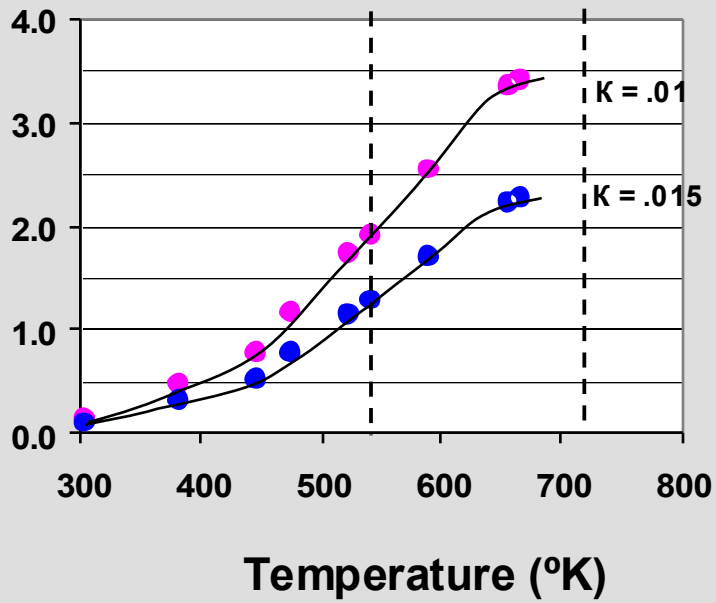

Application of TE Thin Films

Segmented Thermoelements

- Utilize one alloy composition over 100ºC to 200ºC Temperature Interval
- Stack several elements in series to cover complete temperature range

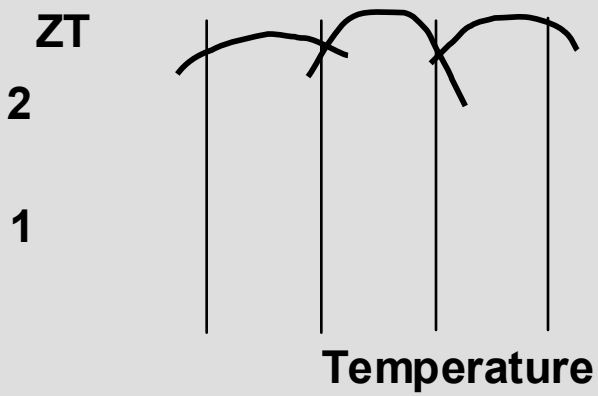

Key Issues

- Films must be > 1000 µm thick
- Contact resistance must be very low
- Scaling up film deposition must allow economic growth of relatively thick films

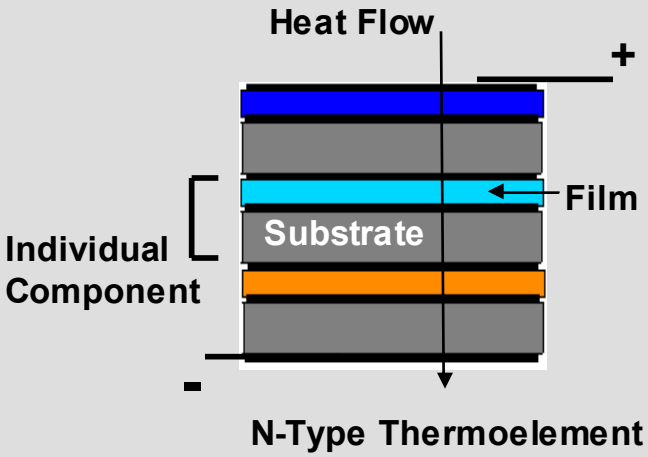

Approach To Scale-Up

Approach will depend on material, substrates and configuration

Films on Flexible Substrates

- Large Sputtering system
- Roll Coater

Thick Films on Metal Discs

- Large Sputtering System
- Triode Sputtering

Cost/Benefit Analysis

Assumed Future Capabilities

- Assumed Thermal Energy Available: 58.3 MMBTU/hr = 17 x 10^6 W_T
- TEG's Intercept 50 % Of Thermal Energy in Off-gas Stream
- Converter Efficiency = 20 %
- Utilize 1000 TEGs, Each Producing 1.7 kW_E to Generate 1.7 MW_E
- Unit Cost assumed to be $1000

Calculated Net Present Value

- Capital Investment ($ 1 Million) 1st Yr
- NPV Based on 6% Discount Rate
- No Maintenance and Repair
- NPV = Present Value - $ 1 M

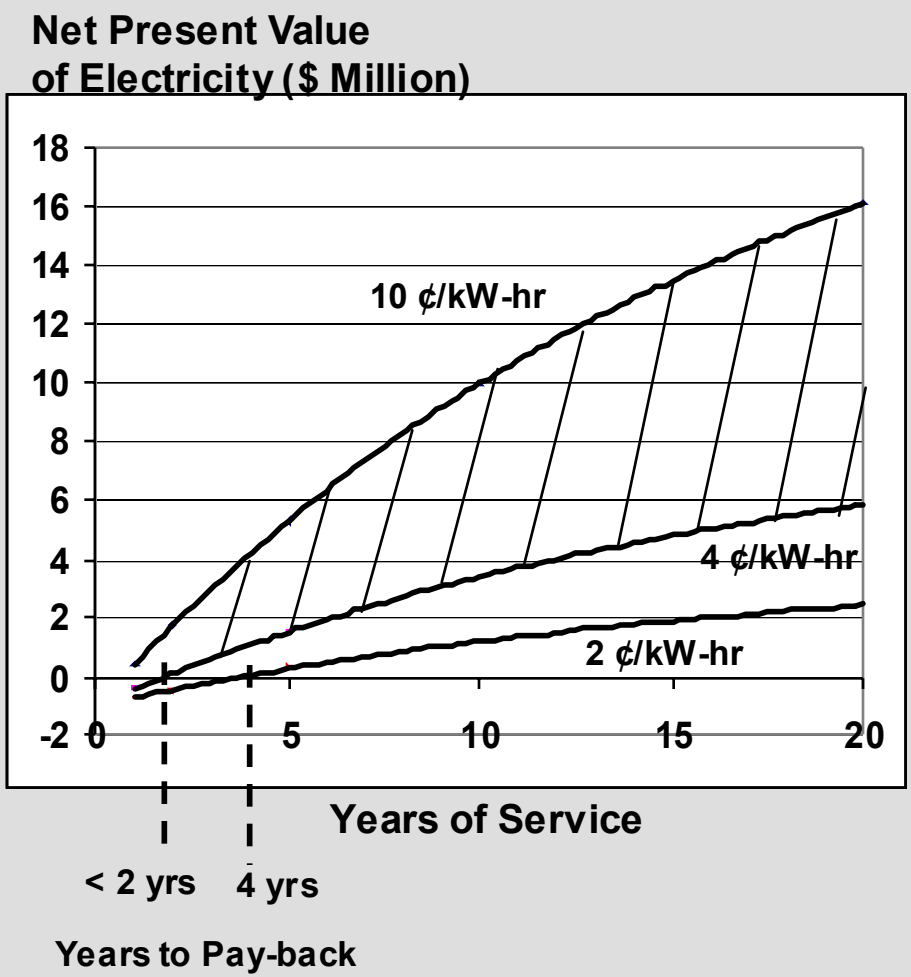

Accomplishments To Date

- Achieved excellent TE properties with sputtered Ag/PbTe films indicating possible ZT values > 2
- Established industry collaboration through monthly teleconferences and meeting held at Meadville PPG plant to discuss in-plant demonstration
- Constructed test bed at PNNL that simulates conditions at Meadville for up to 4% of furnace exhaust flow -- will be used to acquire data relevant to in-plant demonstrations, test modeling calculations and to test TEGs based on advanced materials
- Completed simple NPV analysis that shows future cost-effectiveness of power conversion and early capital payback when value of electricity produced is in the range 2 to 10 ¢/kW_h and above

3 Year Program Plan

Tasks	FY04	FY05	FY06	FY07
1. Energy Conversion System Design	PbTe TEG	Adv Materials & Heat Exchange Economic Analysis	Update Economic Analysis	
2. TE Generator Testing & In-Plant Demonstration	TEG Test Bed (PNNL) In-Plant Demo At PPG	6 %	10 %	20 %
3. Combustion Emission Optimization		Condensate Characterization		
4. Advanced TE Materials Development	Advanced TE Films		ZT = 2, T < 1000°F Scale-Up	Approach for T > 1000°F

Technology Approach To Achieve Long Term Goals

Capture Of 50 % Of Thermal Energy

- Develop Heat Exchanger Based On Heat Pipe Technology
- Will Allow Most Effective Coupling To TEG Units (Isothermal delivery of Heat)

Achieving 20 % Conversion Efficiency

- Develop Advanced TE Materials with ZT > 2 for 100ºF to 1000ºF (40ºC to 540ºC)
- Performance Could Exceed 20% with TE Materials Operating Above 1000ºF
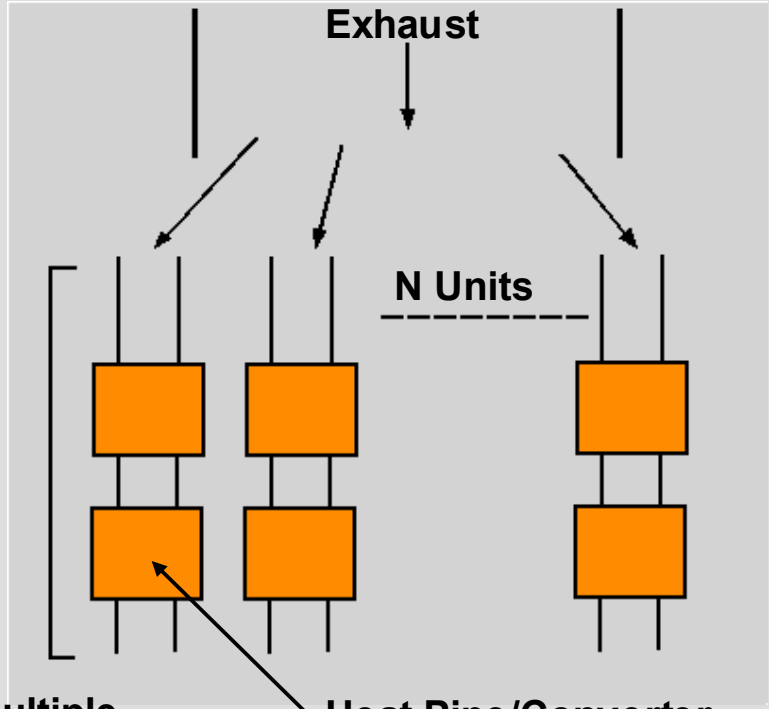
Heat Pipe / Converter Assembly