DOE Sensors & Automation
2007 Annual Portfolio Review

PHASED: Micro Gas Analyzer on NeSSI for processing industries applications

Fouad Nusseibeh,

Honeywell Labs, Plymouth, MN 55441

Project Description

- **Need:** Modular, standardized, IS and networked sampling system ***N****ew* ***S****ampling and* ***S****ensor* ***I****nitiative* (**NeSSI-II**) to support composition analyses of process streams
- **Goal:** Field testing of ***P****hased* ***H****eater* ***A****rray* ***S****tructure for* ***E****nhanced* ***D****etection* (**PHASED**) and other microanalytics on NeSSI-II in the plants of collaborating members of the processing industries
- **Core Technology:** Hi-Speed, Multi-Stage Pre-Concentration, Affordable µGC; NeSSI-1.5 configuration meeting mini-VOC needs
- **Novel/Transformational Element(s):** PHASED µGC on SP-76 of NeSSI-II
- **Initial Industry for Application:** 2 field test sites: 1) Helium production, and 2) HCl in butane
- **Crosscutting Applicability:** Industrial applications in Refining/Petrochemical/Chemical, Mining/Minerals/Materials, Food/Ag/Forestry, Pharmaceutical, Natural Gas, Air Quality and Medical Diagnostics
- **Key Project Deliverable(s):** Report on results from 2 field tests

NeSSI and PHASED

Microanalytics for Process Control Solutions

Technical Concept – NeSSI-I, -II, -III

- **NeSSI-III Sampling System:**
  - Modular, IS, networked, standardized sensor platform (plug and play)
  - Pressure, flow, temperature, and composition
  - Micro-components with lower-cost life cycle
  - Supports microanalytics:

    PHASED μGC

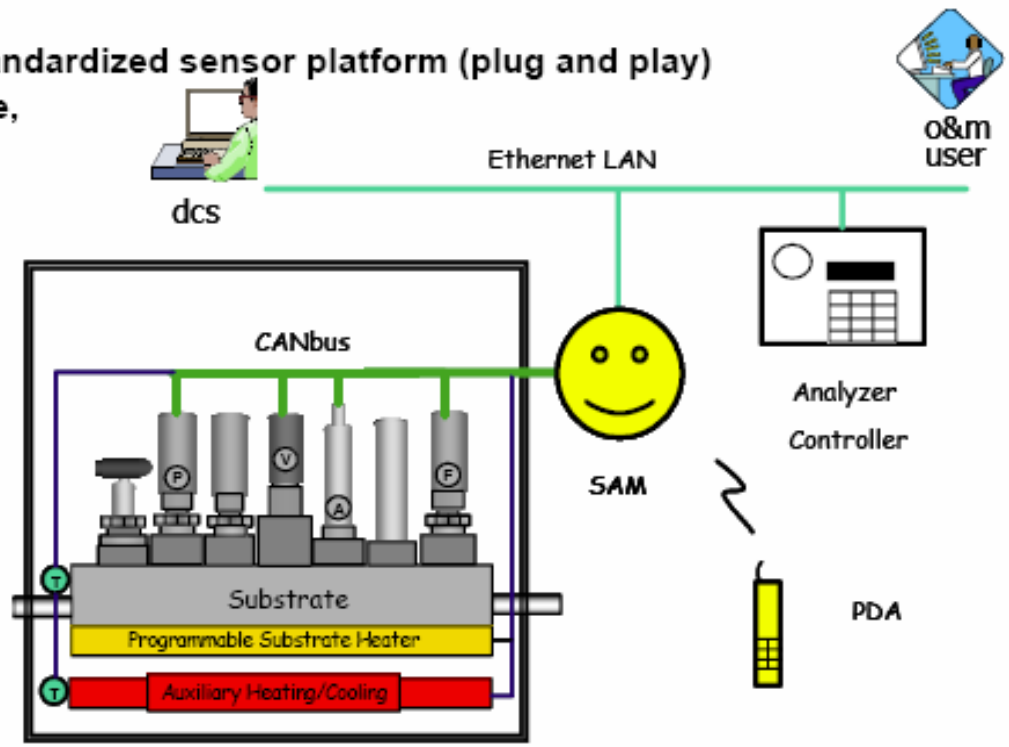

Applications:

- In-situ process stream monitoring
- Ind. process control and automation
- Petroleum refineries, chemical processing plants, metals & food processing

Process monitoring with lower-cost of life-cycle and improved safety

PHASED Analyzer and Device Packaging

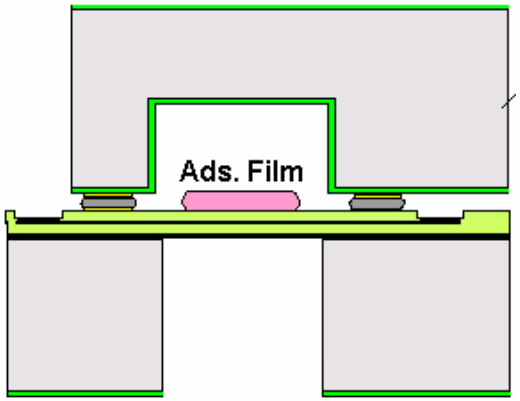

PHASED Cross Section

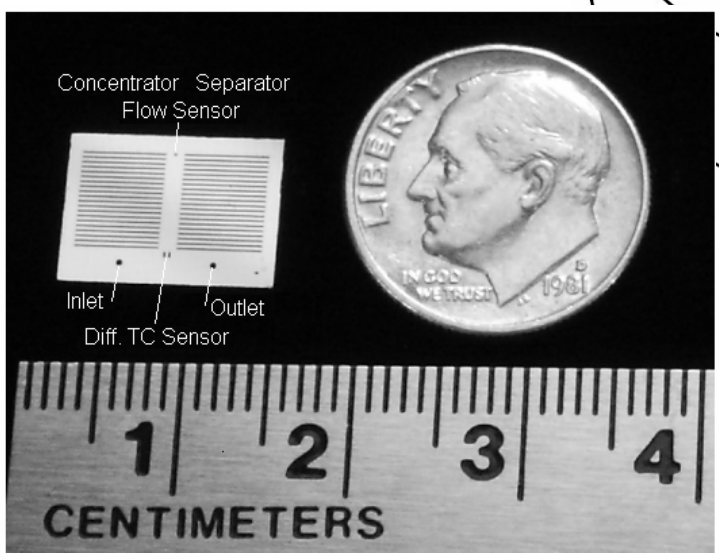

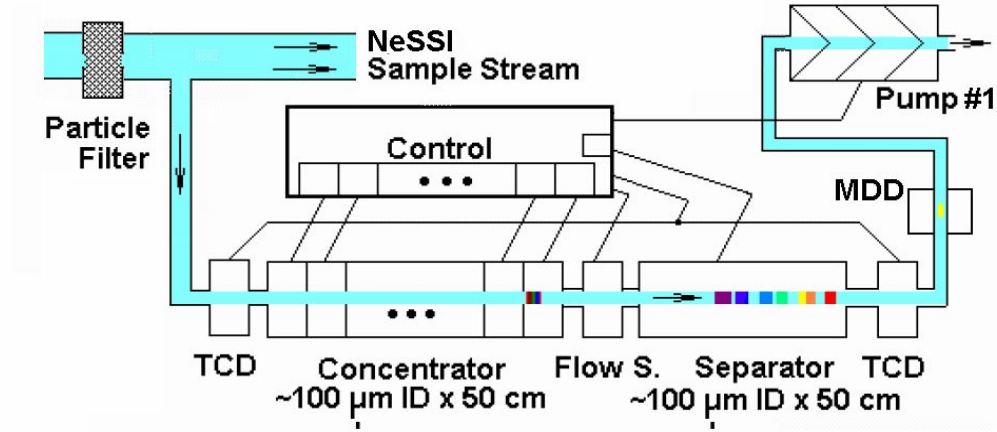

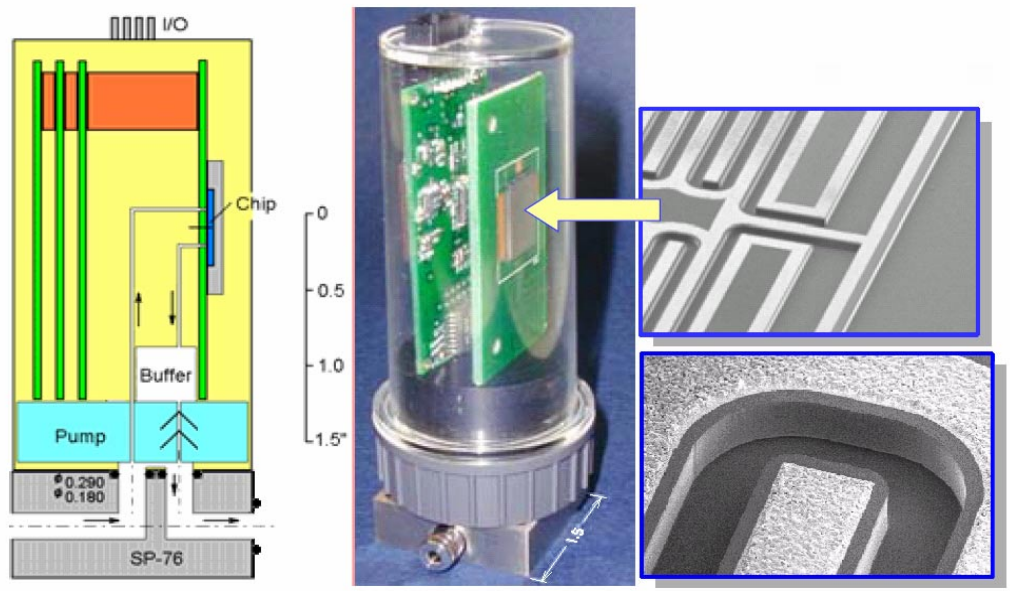

NeSSI

Flow Diagram of PHASED-on-NeSSI

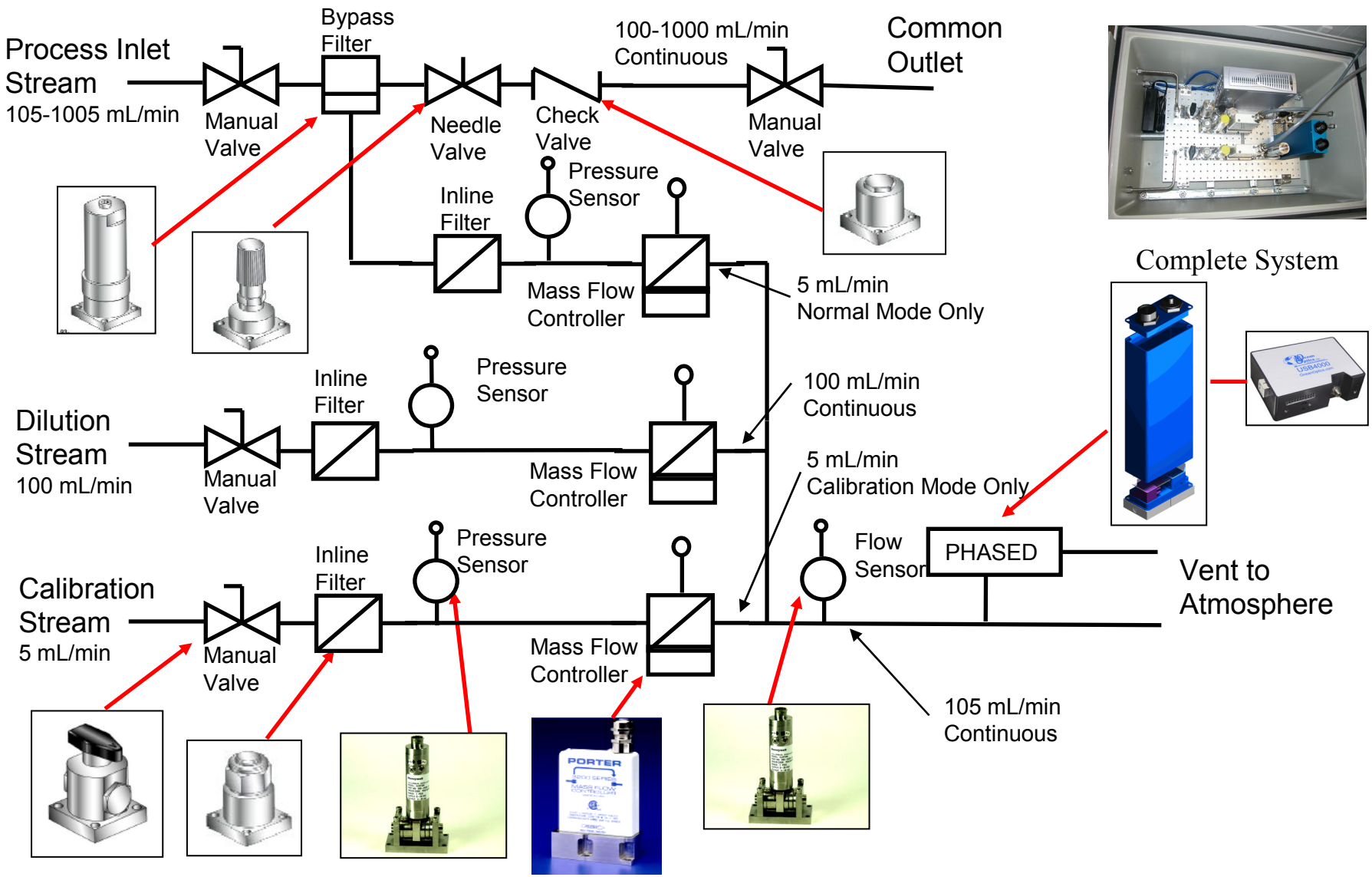

Energy Savings

- **How will energy be saved?**
  - Industrial Process Plants benefit from in-situ sampling, more affordable and faster sensing, tighter control, fewer upsets, less product waste. We analyzed 8 specific applications to determine the total energy savings, resulting in:

    Tighter control of operational parameters: 78 TBtu/year

    Upset avoidance: 3.7 TBtu/year
- **Assumptions used in calc.:**
  - Extrapolation based on ratio of energy used in example cases to energy used in the industry total
- **How much energy will be saved? The following slide shows the total for each example and the extrapolation**
  - Total savings for examples = 81.8 TBtu/year (62.0 w/o fired heaters)
  - Extrapolated total = 256 TBtu/year ($1.5B/ year by 2020)

Energy Savings Correlation

Application	Industry Group (NAICS Codes)	Type of Savings	Total Energy Consumed (MMBtu/yr)	Energy Savings (MMBtu/yr)	Energy Savings (%)	Total Energy for Industry Group (MMBtu/yr)	Saving for Industry Group (MMBtu/yr)	Energy Savings (%)	Sensors Required
Ethylene Production	324110	Upset Avoidance & Process Improvement	656,372,200	13,537,677	2.06%	2,146,155,922	44,264,466	2.06%	Acetylene, CO, CO_2, C_1 - C_8
Metals Processing	331, 332	Waste Avoidance	352,000,000	35,200,000	10.00%	3,005,000,000	88,260,000	2.94%	H_2O, CO, H_2, CH_4, O_2, CO_2, N_2, THC
Hydrogen Production	325	Process Improvement	283,202,150	2,347,100	0.83%	6,064,000,000	50,256,731	0.83%	CO, H_2, CH_4, O_2, CO_2, N_2, N_2O, C_2 - C_7
TiO_2 Drying	325	Process Improvement	888,462	44,423	5.00%	N/A	N/A	N/A	H_2O
Fired Heaters	324110	Process Improvement	1,524,240,000	19,815,120	1.30%	4,983,844,078	64,789,973	1.30%	O_2
Aluminum Production	3313	Process Improvement	490,000,000	7,350,000	1.50%	N/A	N/A	N/A	Al_2O_3:TC Ratio
Pulp Production	322110	Process Improvement	83,904,000	3,508,713	4.18%	198,000,000	8,280,000	4.18%	Inorganic Ions
Refigerant Production	325	Upset Avoidance	7,987	7,987	100.0%	N/A	N/A	0.66%	??
TOTAL			3,390,614,799	81,811,020	2.41%	16,397,000,000	255,851,170	1.56%	
TOTAL INDUSTRIAL CONSUMPTION			23,798,000,000	81,811,020	0.34%		255,851,170	1.08%	

- **Correlation to PHASED Commercialization Plan:**
  - All of the above applications are reflected in Phase 2 except for pulp and paper and refrigerant production – or 5% of the total energy savings
  - Pulp and paper requires Phase 3 (MS) detection
  - Refrigerant production may be addressed with Phase 1 (sensor) rather than Phase 2 (GC)

Project Status

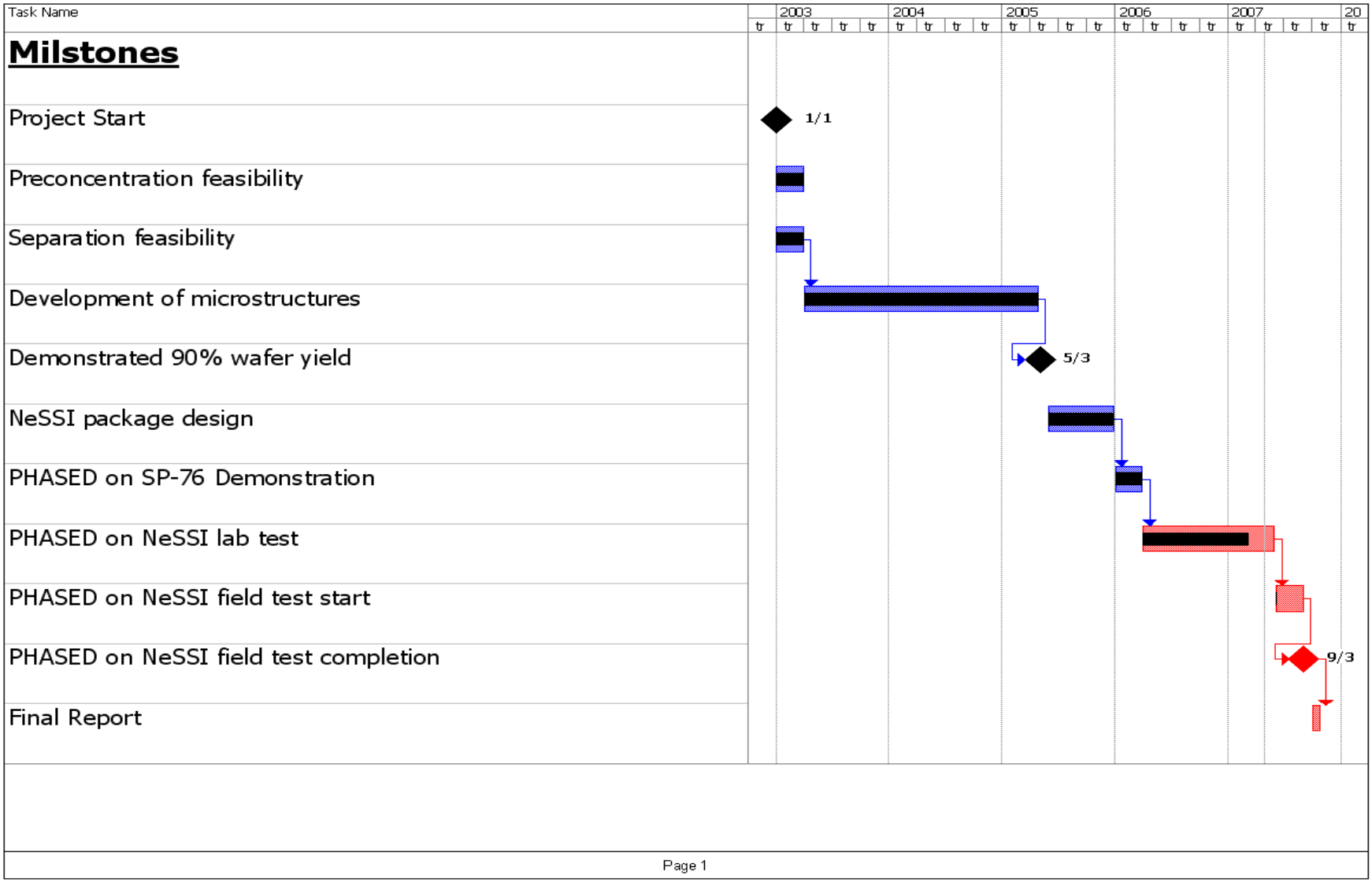

Accomplishments to Date

- Demonstrated high-speed µGC pre-concentrator & separation
- Demonstrated separation of H2O, CH4, C3H8, C4H10, …., C9, C10
- Modeled feasibility of separation up to C18, w/temp. ramp
- Demonstrated PC gain of 63x for hexane, and ~100x for CO2; modeled PC gains >1,000 for high molecular weight compounds
- Increased PHASED chip fabrication yield to >90%
- Identified 2 test sites and applications; agreed with field test participants on gases to be pre-concentrated, separated and detected
- Developed and fabricated a complete PHASED µGC system with electronics that fits into two NeSSI's SP-76 modules included the detector (MDD and driver)
- Completed the assembly, (SAM, Power Supply, sensor controller)
- Developed algorithms and software program to run and analyze the PHASED-µGC output data
- Improved preconcentration with heated connections
- Improved separation with OV-5 thin film material

Completed & Future Milestones

	Plan	Completion
▪ Preconcentration feasibility	3/31/04	3/31/04
▪ Separation feasibility	3/31/04	3/31/04
▪ Demonstrated 90% wafer yield	5/ 01/05	5/ 01/05
▪ NeSSI package design	4/30/06	4/30/06
▪ PHASED on SP-76 Demonstration	6/30/06	6/30/06
▪ PHASED on NeSSI lab test	7/31/06	5/30/07
▪ PHASED on NeSSI field test start	9/30/06	6/01/07
▪ PHASED on NeSSI field test compl.	4/30/07	9/01/07
▪ Final Report	6/30/07	10/01/07

Project Next Steps and Future

Next Steps:-

- Complete the lab testing of 2 PHASED µGC packages for field test
- Start and complete field tests
- Final report

Future:-

- The technology developed under this project will be commercialized, provided the PHASED-on-NeSSI field tests are completed successfully.
- A new project has started with internal Honeywell funding for PHASED and NeSSI demonstration, marketing, distribution, sales and service.

Value Proposition for End User

- PHASED μGC on NeSSI-II provides:
- Availability, for the 1st time ever, of a GC analyzer function in the form and cost of a sensor (size, speed, simplicity, ruggedness, power, maintenance, environmental protection, cost)
- Greater affordability, speed and sensitivity, which equates to tighter process control, energy savings and lower product cost
- Wired or wireless communication with its dedicated SAM (Sensor-Actuator Manager, a local computer), which can have a wireless interface of low installation cost with the plant control room and with other plant sensors.

Other Important Metrics

PHASED μGC:

- Compactness ~ 12 in.^{3} ~ 250 cm^3 to fit on NeSSI
- Speed: Analysis time < 2 s, incl. pre-concentration
- Sensitivity: MDL < 0.1 ppm / PC Gain
- No carrier gas
- No mechanical injection valve
- 100-300x lower power (2-5 W) than desk-top GC
- 10x lower cost

NeSSI systems:

- Standard modules of 1.5 x 1.5” foot-print (SP-76)
- 2 SP-76 spaces for microanalytics
- Communication with SAM

Commercialization

- **The overall plan is in three phases:**
  - Phase 1 – Apply pre-concentration to existing Honeywell sensors and analyzers – Funded for Assessment in 2006 and 7
  - Phase 2 – Commercialize PHASED-based GC products in the industrial marketplace – Assessment planned for 2008
  - Phase 3 – Commercialize PHASED-based GC and GC/MS products in the air quality, chemical weapons and medical device markets – Assessment planned for 2009

- **The timeline for product introductions is 2008 through 2011**

- **The total revenue expected from these three phases exceeds $150M/year within 5 years of introduction**

Technical Risks Remaining

- **PHASED Applications:** Demonstrate the ability of PHASED to perform the needed separations, sensitivities and service life
  - Reaching a broad set of applications requires a selection of column phase materials. To date, we have successfully deposited two (OV-5 and Nanoglass). Some form of granular material such as a HayeSep variant, Molesieve, or a CarboPack material would be helpful, but experiments to date have not produced sufficiently smooth depositions.
  - For analysis of liquids, the development of a PHASED vaporization capability would be needed
- **Sampling via NeSSI:** A family of appropriate NeSSI components must exist. This is currently assumed but is developing very slowly – however, PHASED can be deployed without NeSSI.
- **Certifications:** Appropriate certifications must be met for each major market. An IS version of NeSSI may evolve; demonstrate an IS version of PHASED.

Summary

Accomplishments:

• Demonstrated high-speed µGC pre-concentrator & separation
• Designed, fabricated, developed, and build a complete PHASED µGC system with electronics that fits into two NeSSI's SP-76 modules
• Integrated the detector system (MDD, and driver) into the PHASED on NeSSI unit

PHASED mGC on NeSSI-II provides:

• First time ever, a GC analyzer function in the form and cost of a sensor (size, speed, simplicity, ruggedness, power, maintenance, environmental protection, cost)
• Greater affordability, speed and sensitivity, which equates to tighter process control, energy savings and lower product cost
• Wired or wireless communication with its dedicated SAM, which can have a wireless interface of low installation cost.
• No carrier gas
• No mechanical injection valve