U. S. Department of Energy
Energy Savings Assessment (ESA)

Overview of Steam System Training-Assessments for Site Leads

Instructor: Greg Harrell

General Information

- If problems are encountered call Emily Kirksey
  - 703-748-6428
- These presentation materials will be sent to participants by email.

Course Developed By:

- Greg Harrell, Ph.D., P.E.
  - Energy Management Services
    - 341 Willocks Drive
    - Jefferson City, Tennessee 37760
    - Telephone: (865) 719-0173
    - Email: gregharrell@emscas.com

Greg Harrell Biographical Sketch

- BS Mechanical Engineering, University of Tennessee Knoxville - 1987
- MS Mechanical Engineering-Thermodynamics, University of Tennessee Knoxville - 1994
- Ph.D. Mechanical Engineering-Thermodynamics, Virginia Tech (VPI&SU) - 1997
- From 1987 to 1993 Dr. Harrell worked as a design engineer and utilities process engineer for BASF Corporation at a large industrial complex. As a utilities process engineer he had oversight responsibility for the engineering and technical activities of the entire utilities department. This included steam production, electric power generation, compressed air systems, industrial refrigeration facilities, industrial HVAC systems, water filtration facilities and the wastewater treatment plant.
- Dr. Harrell completed his doctoral degree at Virginia Tech (VPI&SU) with a focus on applied thermodynamics. His major areas of research were refrigeration cycle efficiency improvement and two-phase flow. While completing his doctoral degree he served as a mechanical engineer for the Energy Management Institute at Virginia Tech. From 1997 to 2001 he served as the Director of Technical Assistance for the institute. In this capacity Dr. Harrell was directly involved in various aspects of energy management for industry located worldwide. These activities included complete facility energy analysis, individual process analysis, industrial training courses, and software development for energy system modeling. Dr. Harrell has conducted many energy surveys for industrial clients throughout the world. Industrial assessments and training courses have been completed on six continents in twenty-two countries and in thirty-five of the United States. Along with this work he has conducted many industrial courses on energy systems. As a part of this instructional work Dr. Harrell developed the United States Department of Energy (USDOE) BestPractices Steam End User Training and co-developed the USDOE Steam Specialist Qualification Training. He played a major role in the development of the USDOE BestPractices Steam Tools and authored the Steam System Survey Guide, which has become the text for university mechanical engineering courses. He has also become a certified instructor of the Compressed Air Challenge®. Dr. Harrell served as an Assistant Professor of Mechanical Engineering at Virginia Tech, teaching undergraduate thermodynamics courses.
- Currently, Dr. Harrell is a Senior Research Associate for the Energy, Environment and Resources Center of The University of Tennessee. His primary roles remain: complete facility energy analysis, individual process analysis, industrial training courses, university instruction, as well as energy system modeling and software development. Dr. Harrell is also a primary instructor in the North Carolina State University Energy Management Diploma Program. Industrial systems serving as the focus of his attention are: boilers, steam systems, combined heat and power systems (cogeneration), compressed air systems and refrigeration systems.

Objectives

- Introduce U.S.DOE Training-Assessments and highlight Site Lead Training-Assessment activities.
- Increase familiarity with U.S.DOE Steam Tools Suite.
- Initiate development of Training-Assessment Project List.

U.S.DOE Training-Assessments

Overview

Training-Assessments

- *Training-Assessments* are designed to provide U.S. industry with immediate, tangible, and sustainable results.
  - Economic savings
  - Energy savings
  - Environmental savings
  - Productivity and quality improvements
  - Technical assistance
  - Replication of BestPractices
  - Sustainable impacts

Training-Assessment Expectations

- The *Training-Assessment* is **not** a traditional system assessment.
  - The *Training-Assessment* is an abbreviated system assessment.
  - Project identification will result.
  - *U.S.DOE Tools* training is a primary focal point.
  - General system management training is a focal point.
  - Project evaluation will be completed by the onsite team using the *U.S.DOE Tools*.
  - An end result will be development of a roadmap for progress.
  - Reporting will be limited.

Training-Assessment Major Milestones

- Initiation
- Pre-assessment preparation
- Onsite activities
  - Introduction
  - Fundamental investigations
    - Project identification
    - Field measurements
    - Project modeling
    - Results presentation
  - U.S.DOE Tools and industrial energy system management training
    - On-the-job training style
  - Preliminary Findings Meetings
- Post-assessment report

Central Focus - Projects

- Site specific projects will serve as catalysts for information exchange.

  - Boiler efficiency modifications
  - Fuel switching
  - Boiler blowdown thermal energy recovery
  - Steam demand reduction
  - General turbine operations
  - Turbine-PRV operations
  - Condensing turbine operations
  - Thermal insulation
  - Condensate recovery
  - Flash steam recovery
  - Steam trap management

Investigations are not restricted to fundamental projects, but fundamental projects provide excellent opportunities for training.

Project Evaluations

- During the Training-Assessment projects will be:
  - conceived,
  - investigated in the field,
  - developed,
  - evaluated through field measurements,
  - evaluated through modeling,
  - subjected to a preliminary economic analysis,
  - and identified as recommended or rejected.
- Fundamental analysis will be used to model projects as well as the U.S.DOE Steam Tools.
  - Steam System Scoping Tool (SSST).
  - Steam System Assessment Tool (SSAT).
  - Thermal Insulation Evaluation Tool (3E-Plus)
- All stages of project investigation will be used for training.

U.S.DOE Training-Assessments

Site Lead Preparation

Site Lead Preparation – Team

- Identify the support personnel required to complete the *Training-Assessment*.
  - *Assessment Lead Team*
    - Continuously devoted to the onsite activities
      - ESA Expert
      - Site Lead
      - Development Personnel
        - » Interested personnel on and off-site.
  - *System Operations Personnel*
    - Periodically as needed.
  - *System Maintenance Personnel*
    - Periodically as needed.
  - *Technical Support Staff*
    - Periodically as needed to provide information and to receive training.
  - *Site Management*
    - As desired.
      - *Initiation Meeting* participation is critical.
      - *Training-Assessment Findings Presentation* participation is critical.

Site Lead Preparation – Tools

- Ensure the U.S.DOE Tools are functioning on a computer that will be available to the Site Lead while in the Team Room.
  - The website for downloading the U.S.DOE Tools is:
    - http://www.eere.energy.gov/industry/bestpractices/software.html
  - The Site Lead should explore the U.S.DOE Steam Tools.

Site Lead Preparation - SSST

- SSST is a software tool designed to develop a greater **awareness** of areas of steam system performance improvement.
  - Questionnaire format.
  - Straightforward and simplistic.
  - The tool is divided into several categories
    - General data
    - Profiling data
    - Total system operating practices
    - Boiler plant operating practices
    - Distribution, end use, and recovery systems operating practices
    - Summary evaluation
    - Next steps.
- SSST should be completed by the Site Lead prior to the onsite activities.
  - The results should be used to aid in developing the Project List.

SSST

- What is the condition of your system?
  - How well do you measure and benchmark?

Typical scores

SUMMARY RESULTS		
	POSSIBLE	YOUR
SCOPING TOOL QUESTIONS	SCORE	SCORE
1. STEAM SYSTEM PROFILING		
STEAM COSTS		
SC1: Measure Fuel Cost To Generate Steam	10	7.5
SC2: Trend Fuel Cost To Generate Steam	10	6.9
STEAM/PRODUCT BENCHMARKS		
BM1: Measure Steam/Product Benchmarks	10	5.6
BM2: Trend Steam/Product Benchmarks	10	5.7
STEAM SYSTEM MEASUREMENTS		
MS1: Measure/Record Steam System Critical Energy Parameters	30	22.5
MS2: Intensity Of Measuring Steam Flows	20	8.5
STEAM SYSTEM PROFILING SCORE	90	56.7

Typical score: 63%

SSST

- What is the condition of your system?
  - How well do you manage your distribution system and boiler water?

2. STEAM SYSTEM OPERATING PRACTICES		
STEAM TRAP MAINTENANCE		
ST1: Steam Trap Maintenance Practices	40	23.9
WATER TREATMENT PROGRAM		
WT1: Water Treatment - Ensuring Function	10	8.6
WT2: Cleaning Boiler Fireside/Waterside Deposits	10	7.1
WT3: Measuring Boiler TDS, Top/Bottom Blowdown Rates	10	7.7
SYSTEM INSULATION		
IN1: Insulation - Boiler Plant	10	8.6
IN2: Insulation - Distribution/End Use/Recovery	20	14
STEAM LEAKS		
LK1: Steam Leaks - Severity	10	5.6
WATER HAMMER		
WH1: Water Hammer - How Often	10	8.2
MAINTAINING EFFECTIVE STEAM SYSTEM OPERATIONS		
MN1: Inspecting Important Steam Plant Equipment	20	13.5
STEAM SYSTEM OPERATING PRACTICES SCORE	140	97.2

Typical score: 70%

SSST

- What is the condition of your system?
  - How well do you manage your boiler?

3. BOILER PLANT OPERATING PRACTICES		
BOILER EFFICIENCY		
BE1: Measuring Boiler Efficiency - How Often	10	6.3
BE2: Flue Gas Temperature, O2, CO Measurement	15	9.4
BE3: Controlling Boiler Excess Air	10	7.1
HEAT RECOVERY EQUIPMENT		
HR1: Boiler Heat Recovery Equipment	15	8.5
GENERATING DRY STEAM		
DS1: Checking Boiler Steam Quality	10	4.2
GENERAL BOILER OPERATION		
GB1: Automatic Boiler Blowdown Control	5	2.6
GB2: Frequency Of Boiler High/Low Level Alarms	10	8.6
GB3: Frequency Of Boiler Steam Pressure Fluctuations	5	3.9
BOILER PLANT OPERATING PRACTICES SCORE	80	50.6

Typical score: 63%

SSST

- What is the condition of your system?
  - How well do you manage steam balance, condensate recovery and the distribution system?

4. STEAM DISTRIBUTION, END USE, RECOVERY OPERATING PRACTICES		
MINIMIZE STEAM FLOW THROUGH PRVs		
PR1: Options For Reducing Steam Pressure	10	7.4
RECOVER AND UTILIZE AVAILABLE CONDENSATE		
CR1: Recovering And Utilizing Available Condensate	10	6.4
USE HIGH-PRESSURE CONDENSATE TO MAKE LOW-PRESSURE STEAM		
FS1: Recovering And Utilizing Available Flash Steam	10	3.7
DISTRIBUTION, END USE, RECOVERY OP. PRACTICES SCORE	30	17.5

Typical score: 59%

SSST

- What is the condition of your system?

SUMMARY OF STEAM SCOPING TOOL RESULTS		
	POSSIBLE SCORE	YOUR SCORE
STEAM SYSTEM PROFILING	90	56.7
STEAM SYSTEM OPERATING PRACTICES	140	97.2
BOILER PLANT OPERATING PRACTICES	80	50.6
DISTRIBUTION, END USE, RECOVERY OP. PRACTICES	30	17.5
TOTAL SCOPING TOOL QUESTIONAIRE SCORE	340	222
TOTAL SCOPING TOOL QUESTIONAIRE SCORE (%)		65.3%

Site Lead Preparation - Project List

- The onsite activities are driven by the **Project List**.
- The SSST evaluation initiates the development of the project list.
  - Investigate areas that present as low scores.
- Current investigations can be added to the project list.
  - For example, if the site is investigating recovering condensate from one of the process units this could be one of the projects.
- Investigation ideas should be added to the project list.
  - For example, if there has always been a question about the economic benefit of installing continuous combustion control.
- Fundamental investigations applicable to the site should be added to the project list.

U.S.DOE Training-Assessments

Onsite

Potential Project Identification

- The onsite activities are driven from the Potential Project List.
  - A primary goal is to demonstrate the U.S.DOE Tools in the analysis of projects.
  - Another primary goal is to demonstrate fundamental steam system management principles.
  - The Potential Project List will be continually updated.
- A brief, general site tour is often an excellent catalyst to initiate project discussions.

U.S.DOE Tools Training

- The *ESA Expert* will facilitate project evaluations completed by the *Assessment Lead Team* through field measurements, *U.S.DOE Tools* evaluations, and project validation.
  - The *Site Lead* should be able to replicate all of the investigations completed during the *Training-Assessment*.
  - It is often beneficial for the *Site Lead* to complete some analyses with the *ESA Expert* as a resource but not the lead.

Example Project List

1. Boiler combustion control.
2. Boiler blowdown energy recovery.
3. Low-pressure condensate receiver vent steam.
4. Amine Reactor vent steam.
5. 600 psig steam header is charged to non-use areas.
6. General condensate recovery.
7. Evaporator steam trap sizing results in discharged condensate.
8. Steam trap sizing issues result in bypassing trap.
9. Isothermal Reactor level management results in draining feedwater.
10. Refining Column number 3 utilizes 600 psig steam.
11. Condensing turbine operation.
12. Reactor Pre-heaters remain in service after startup.
13. Accumulator is un-insulated.
14. Rolled Film Evaporator desuperheater operation.
15. Vacuum generation.
16. Condensate use for cleanup issues.
17. Main condensate header is un-insulated.
18. Steam jet ejector condensate recovery potential.
19. Backpressure steam turbine-generator potential.

Project Evaluations

- Projects are conceived, identified, and defined.
- Projects are subjected to field investigation.
- Project evaluations are completed through the use of evaluation tools.
  - General steam system evaluation techniques.
  - Steam system modeling software.
    - *Steam System Assessment Tool—SSAT*.
  - Thermal insulation modeling software.
    - *3E-Plus*.

BestPractices

- Identifying *BestPractices* are fundamental focal points in the *Training-Assessment*.
  - *BestPractices* will be highlighted and communicated to the site representatives.
  - *BestPractices* are an excellent replication vehicle.

Training-Assessment Focus

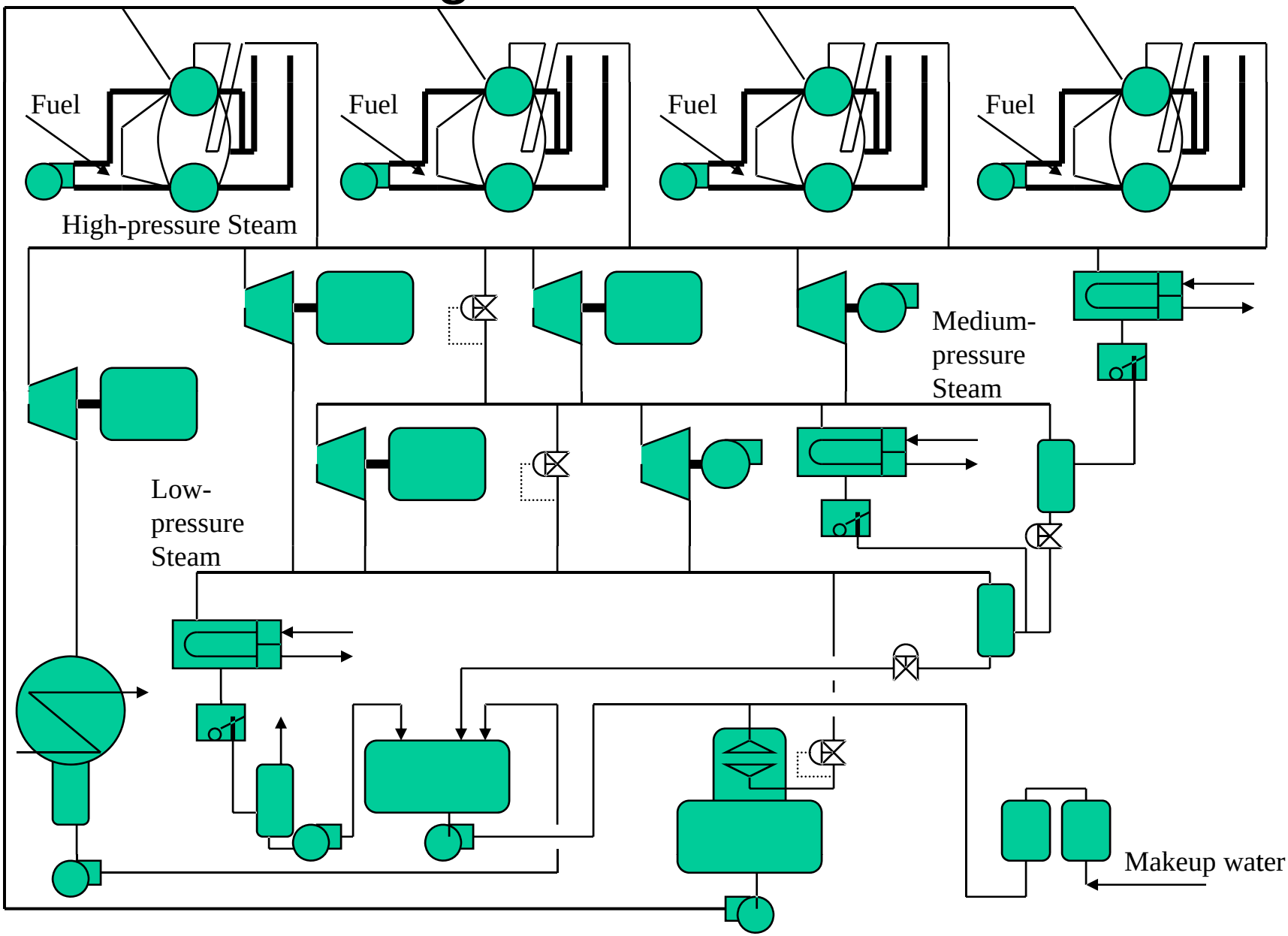

Driving Force

- What is the main driving force for change??

$

Driving Force

- What is the main driving force for change??

$ }
- Energy
- Reliability
- Maintenance
- Productivity
- Quality
- Cost avoidance
- Emissions reductions

Measure

- You are not managing what you do not measure

U.S.DOE Training-Assessments

Onsite

Project Investigations

Boiler Investigations

- Boiler investigations

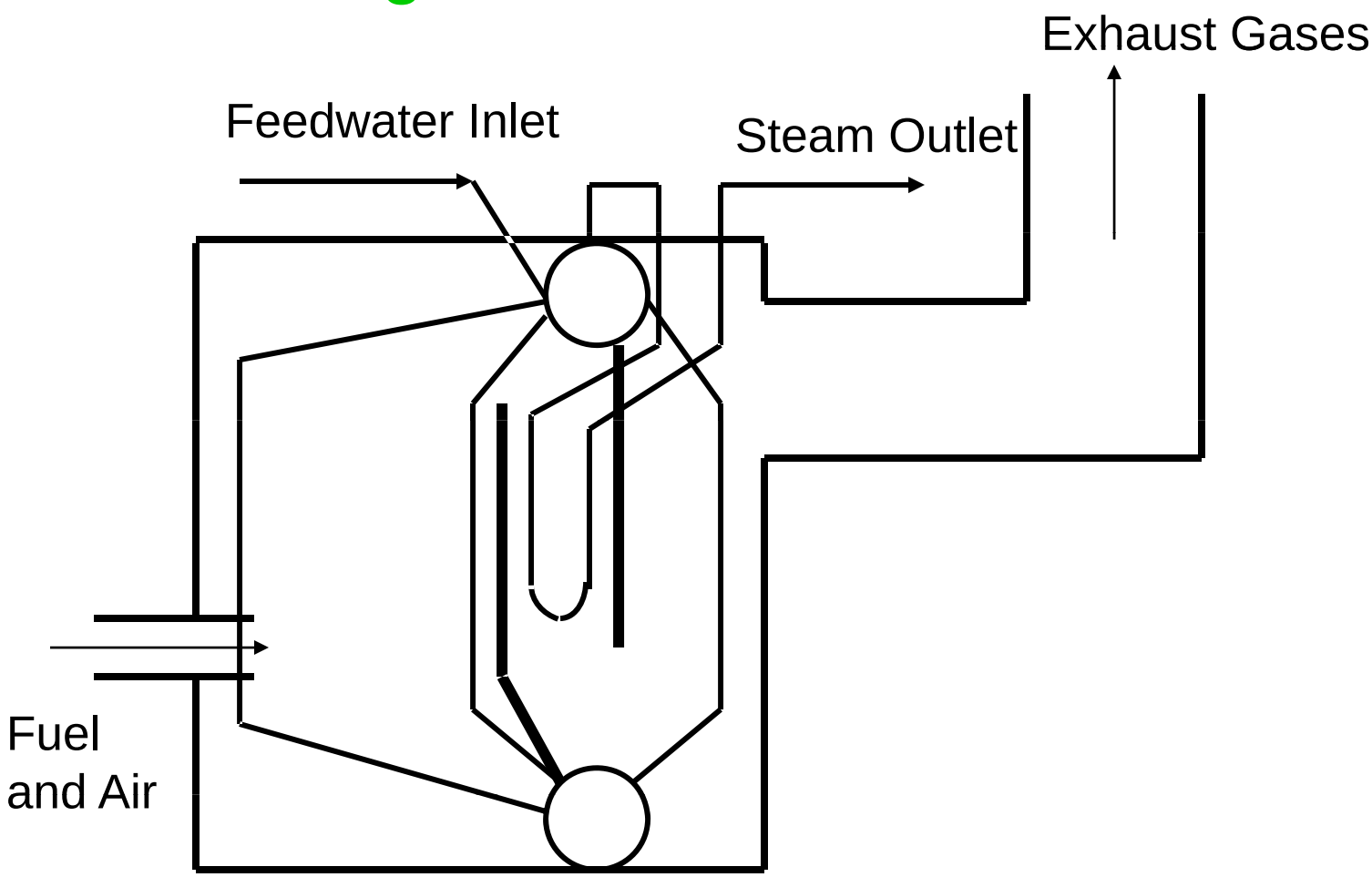

Boiler Investigations

- Boiler losses

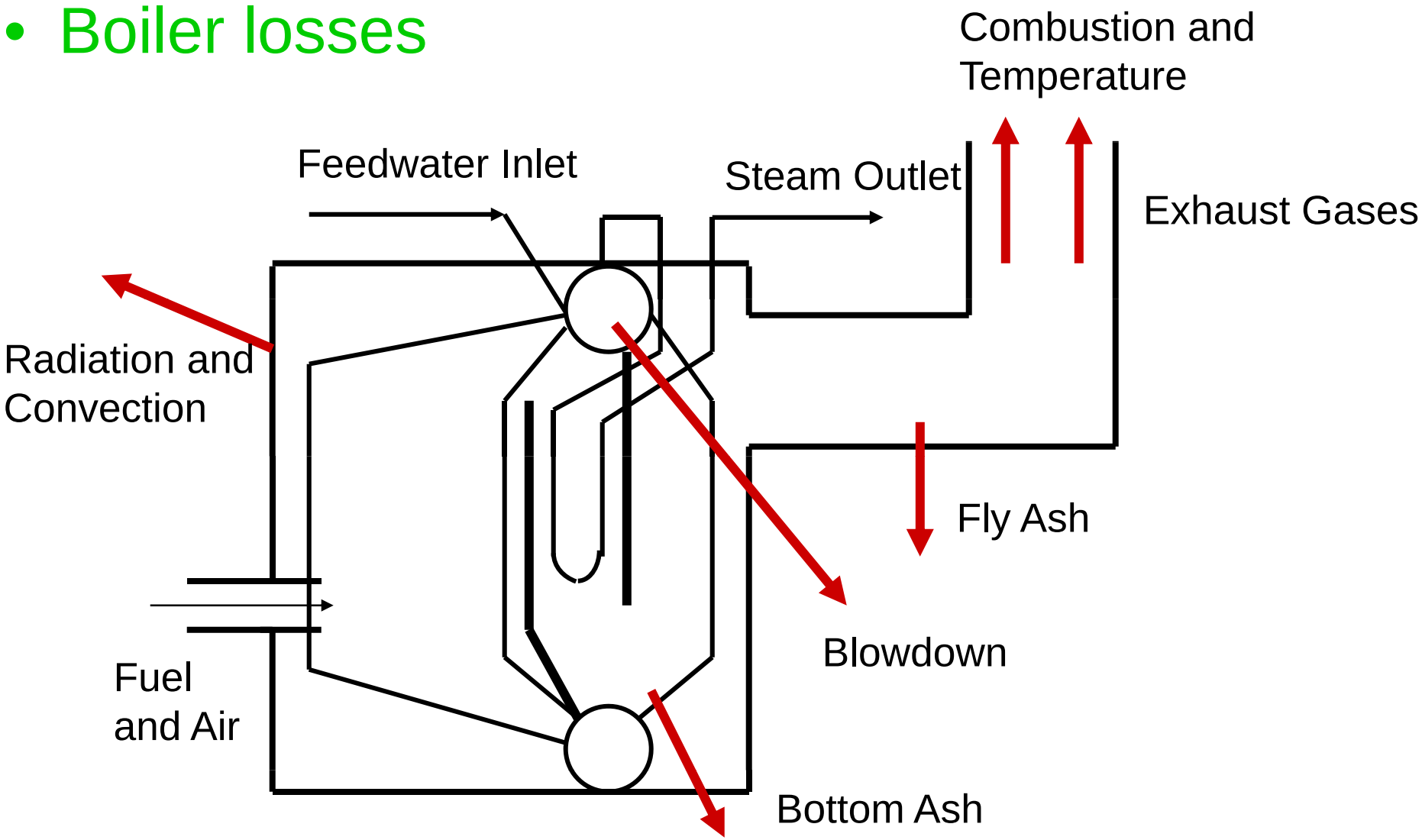

Indirect Efficiency

- Boiler efficiency will be investigated in several manners including an indirect manner
  - By determining the magnitude of the losses
  - The primary losses are typically
    - Shell loss
    - Blowdown loss
    - Stack loss

$$\eta_{indirect} = 100\% - \sum_{losses} \lambda_i$$

$$\eta_{indirect} = 100\% - \lambda_{shell} - \lambda_{blowdown} - \lambda_{stack} - \lambda_{misc}$$

Existing Boiler Operations

- Current boiler operations and equipment will be targeted.

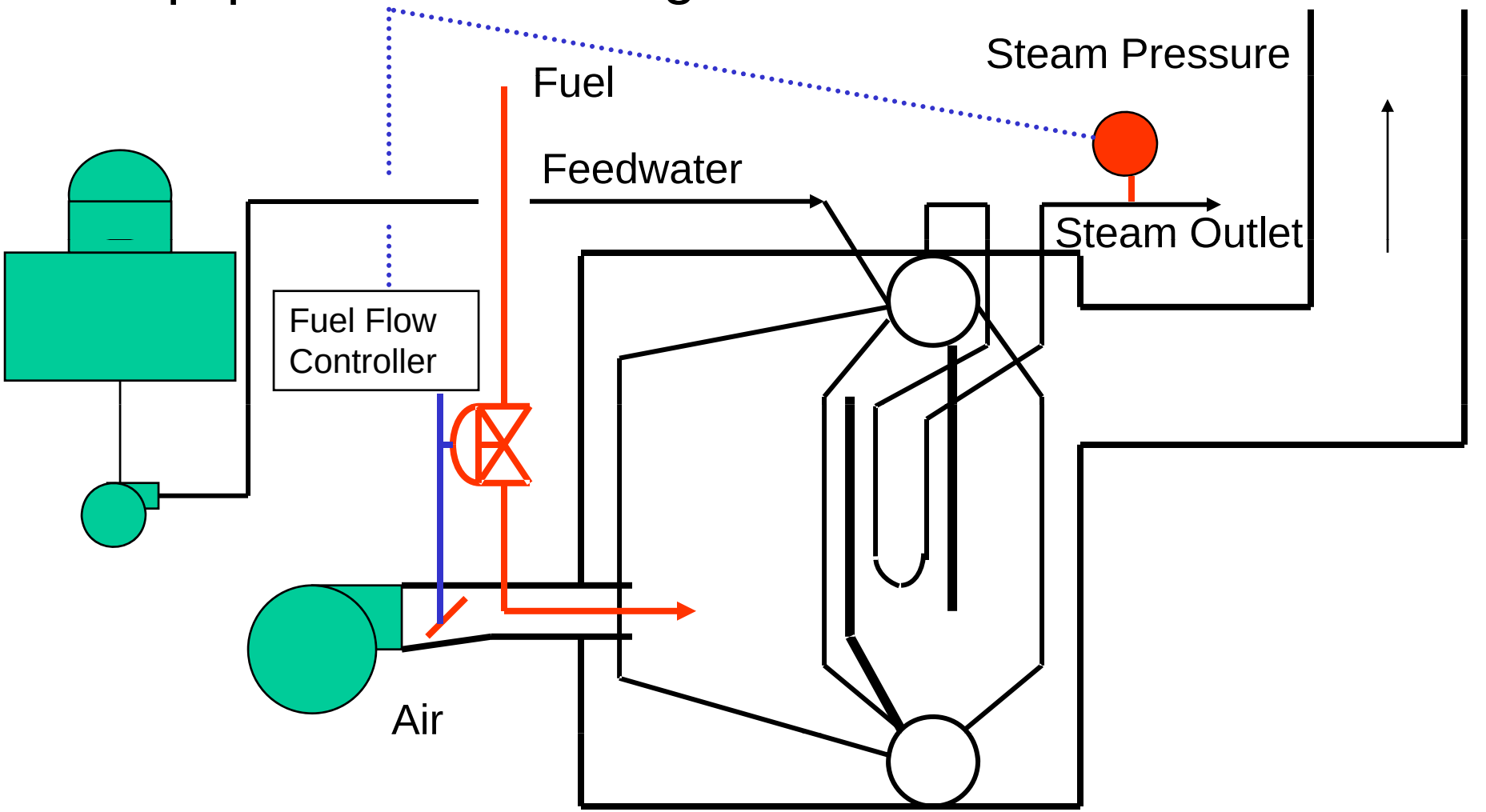

Combustion Control

- Combustion control is a common project area.

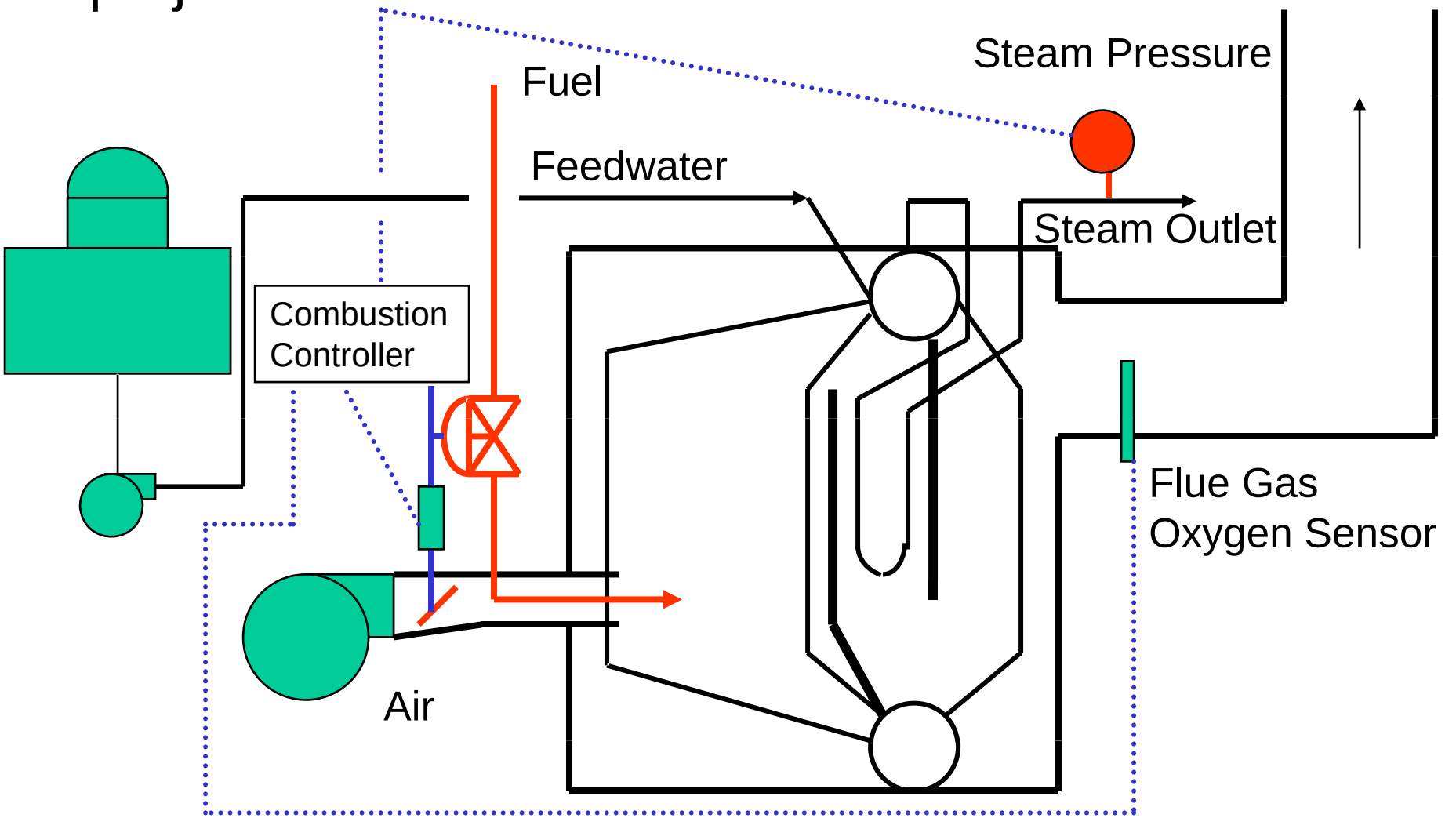

Stack Loss Reduction Through Tuning

Number 2 Fuel Oil Stack Loss [%]															
Flue Gas O_2 Content [%]	Flue Gas Temperature - Combustion Air Temperature [°F]														
	230	250	270	290	310	330	350	370	390	410	430	450	470	490	510
1.0	10.5	10.9	11.3	11.8	12.2	12.6	13.0	13.5	13.9	14.3	14.7	15.2	15.6	16.0	16.5
2.0	10.7	11.2	11.6	12.1	12.5	12.9	13.4	13.8	14.3	14.7	15.2	15.6	16.1	16.5	17.0
3.0	11.0	11.4	11.9	12.4	12.8	13.3	13.8	14.2	14.7	15.2	15.7	16.1	16.6	17.1	17.6
4.0	11.3	11.8	12.2	12.7	13.2	13.7	14.2	14.7	15.2	15.7	16.2	16.7	17.2	17.7	18.2
5.0	11.6	12.1	12.6	13.1	13.7	14.2	14.7	15.2	15.8	16.3	16.8	17.3	17.9	18.4	18.9
6.0	12.0	12.5	13.1	13.6	14.2	14.7	15.3	15.8	16.4	16.9	17.5	18.1	18.6	19.2	19.8
7.0	12.4	13.0	13.5	14.1	14.7	15.3	15.9	16.5	17.1	17.7	18.3	18.9	19.5	20.1	20.7
8.0	12.8	13.5	14.1	14.7	15.4	16.0	16.6	17.3	17.9	18.6	19.2	19.8	20.5	21.1	21.8
9.0	13.4	14.1	14.8	15.4	16.1	16.8	17.5	18.2	18.9	19.6	20.3	21.0	21.7	22.4	23.1
10.0	14.1	14.8	15.5	16.3	17.0	17.8	18.5	19.3	20.0	20.8	21.5	22.3	23.0	23.8	24.6
11.0	14.9	15.7	16.5	17.3	18.1	18.9	19.7	20.6	21.4	22.2	23.0	23.9	24.7	25.5	26.3
Flue Gas T [°F]	300	320	340	360	380	400	420	440	460	480	500	520	540	560	580
Ambient T [°F]	70	70	70	70	70	70	70	70	70	70	70	70	70	70	70
Combustion efficiency				Initial:	81.7	%		Adjusted:	83.2	%					

Reference: Combustion model developed by Greg Harrell, Ph.D., P.E.

Savings Analysis

$$\sigma_{savings} = \left(\frac{1}{\eta_1} - \frac{1}{\eta_2}\right)\dot{E}_{steam} = \left(\frac{1}{\eta_1} - \frac{1}{\eta_2}\right)\left[\dot{m}_{steam}\left(h_s - h_{fw}\right)\right]$$

or

$$\sigma_{savings} = \left(1 - \frac{\eta_1}{\eta_2}\right)\frac{\dot{E}_{steam}}{\eta_1} = \left(1 - \frac{\eta_1}{\eta_2}\right)\dot{E}_{fuel1}$$

or

$$\sigma_{savings} = \left(1 - \frac{\eta_1}{\eta_2}\right)\dot{K}_{fuel1}$$

Stack Loss Reduction Through Energy Recovery

Number 2 Fuel Oil Stack Loss [%]															
Flue Gas O_2 Content [%]	Flue Gas Temperature - Combustion Air Temperature [°F]														
	230	250	270	290	310	330	350	370	390	410	430	450	470	490	510
1.0	10.5	10.9	11.3	11.8	12.2	12.6	13.0	13.5	13.9	14.3	14.7	15.2	15.6	16.0	16.5
2.0	10.7	11.2	11.6	12.1	12.5	12.9	13.4	13.8	14.3	14.7	15.2	15.6	16.1	16.5	17.0
3.0	11.0	11.4	11.9	12.4	12.8	13.3	13.8	14.2	14.7	15.2	15.7	16.1	16.6	17.1	17.6
4.0	11.3	11.8	12.2	12.7	13.2	13.7	14.2	14.7	15.2	15.7	16.2	16.7	17.2	17.7	18.2
5.0	11.6	12.1	12.6	13.1	13.7	14.2	14.7	15.2	15.8	16.3	16.8	17.3	17.9	18.4	18.9
6.0	12.0	12.5	13.1	13.6	14.2	14.7	15.3	15.8	16.4	16.9	17.5	18.1	18.6	19.2	19.8
7.0	12.4	13.0	13.5	14.1	14.7	15.3	15.9	16.5	17.1	17.7	18.3	18.9	19.5	20.1	20.7
8.0	12.8	13.5	14.1	14.7	15.4	16.0	16.6	17.3	17.9	18.6	19.2	19.8	20.5	21.1	21.8
9.0	13.4	14.1	14.8	15.4	16.1	16.8	17.5	18.2	18.9	19.6	20.3	21.0	21.7	22.4	23.1
10.0	14.1	14.8	15.5	16.3	17.0	17.8	18.5	19.3	20.0	20.8	21.5	22.3	23.0	23.8	24.6
11.0	14.9	15.7	16.5	17.3	18.1	18.9	19.7	20.6	21.4	22.2	23.0	23.9	24.7	25.5	26.3
Flue Gas T [°F]	300	320	340	360	380	400	420	440	460	480	500	520	540	560	580
Ambient T [°F]	70	70	70	70	70	70	70	70	70	70	70	70	70	70	70
Combustion efficiency				Initial:	83.2	%		Adjusted:	87.4	%					

Reference: Combustion model developed by Greg Harrell, Ph.D., P.E.

Steam System Assessment Tool - SSAT

- The Steam System Assessment Tool is used to model the entire steam system.

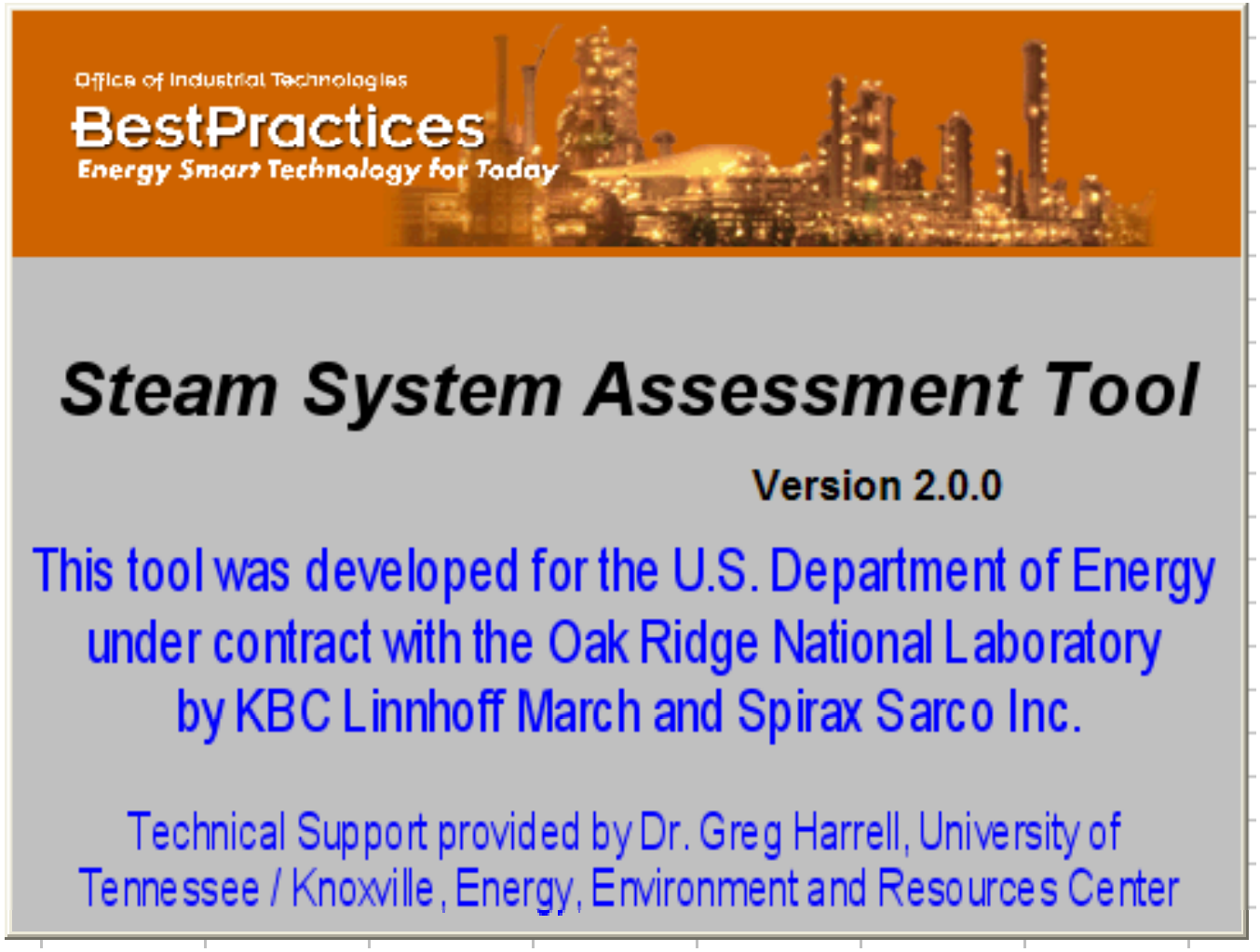

Model Selection

- The model can be configured for up-to three pressure levels.

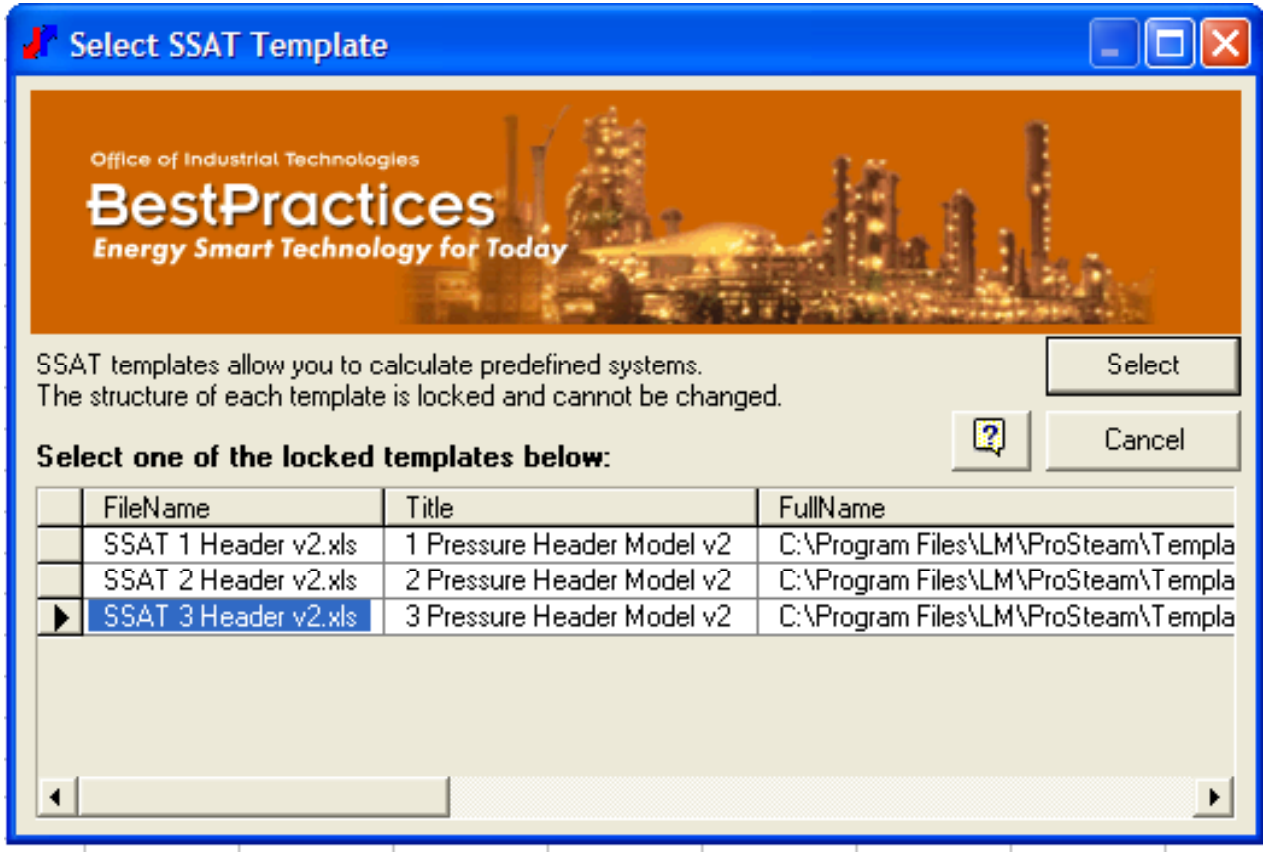

Steam System Modeling

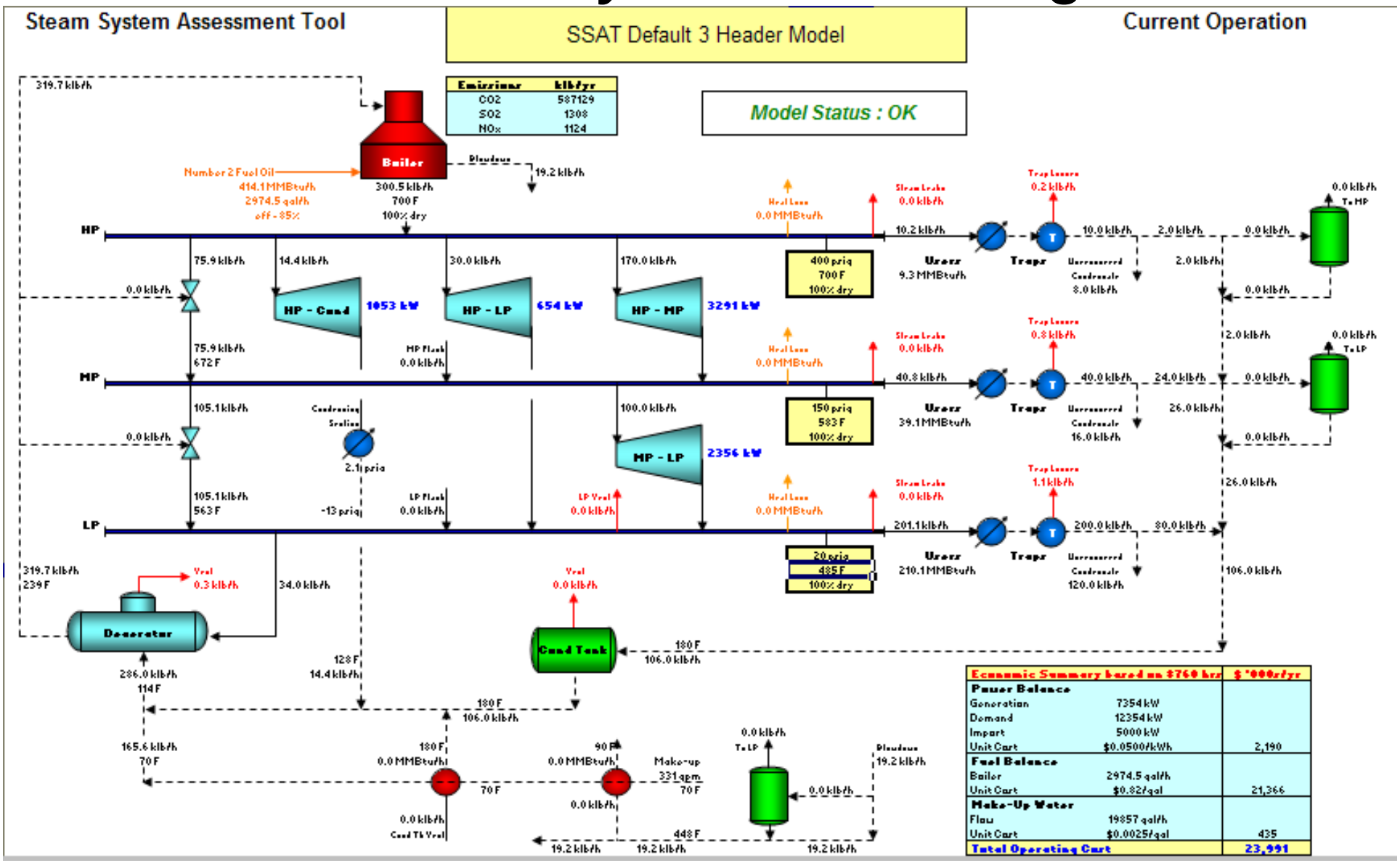

Project Investigations

Project 1 - Steam Demand Savings (Changing the process steam requirements)
Current use - HP: 10 klb/h (9.33 MMBtu/h) MP: 40 klb/h (39.09 MMBtu/h) LP: 200 klb/h (210.10 MMBtu/h)

Do you wish to specify steam demand savings?	Yes

If yes, enter HP steam saving	0 klb/h	
If yes, enter MP steam saving	0.125 klb/h	
If yes, enter LP steam saving	0 klb/h	

Note: A negative saving can be entered to model an increase in steam demand

Note: The savings have been converted to heat duties of 0.00 MMBtu/h (HP), 0.12 MMBtu/h (MP) and 0.00 MMBtu/h (LP) based on current header enthalpies

Note: These heat duties are then used to determine the actual flow change in the Projects Model based on the calculated header enthalpies

Project 2 - Use an Alternative Fuel
Existing Boiler Fuel : Number 2 Fuel Oil Fuel Cost : $0.82/gal

Do you wish to specify an alternative fuel?	No

If yes, choose a new fuel from this drop-down list		Number 2 Fuel Oil
Site Fuel Cost	0.67 $/gallon	Typical 2002 value: $0.67/gallon

Note: HHV for alternative fuel is 139,213 Btu per gal (19,400 Btu/lb)

For user defined fuels, enter HHV	15000 Btu/lb	

Note: Emissions cannot be calculated for user defined fuels

Project 3 - Change Boiler Efficiency
Existing Efficiency : 84.7432185370612%

Do you wish to specify a new boiler efficiency?	No

Note: An example use of this project option is to model the effect of installing an economizer by increasing the efficiency

- Built-in projects execute a side-by-side comparison demonstrating project impact.

Model Results

- SSAT completes three balances on the steam system.
  - Mass balance.
  - Energy balance.
  - Economic balance.

Results Summary

SSAT Default 3 Header Model

Model Status : OK

Cost Summary ($ '000s/yr)	Current Operation	After Projects	Reduction	
Power Cost	2,190	2,190	0	0.0%
Fuel Cost	21,366	21,347	20	0.1%
Make-Up Water Cost	435	435	0	0.1%
Total Cost (in $ '000s/yr)	**23,991**	**23,971**	**20**	**0.1%**

On-Site Emissions	Current Operation	After Projects	Reduction	
CO2 Emissions	587129 klb/yr	586591 klb/yr	538 klb/yr	0.1%
SOx Emissions	1308 klb/yr	1306 klb/yr	1 klb/yr	0.1%
NOx Emissions	1124 klb/yr	1123 klb/yr	1 klb/yr	0.1%

Power Station Emissions	Reduction After Projects	Total Reduction	
CO2 Emissions	-3 klb/yr	534 klb/yr	-
SOx Emissions	0 klb/yr	1 klb/yr	-
NOx Emissions	0 klb/yr	1 klb/yr	-

Note - Calculates the impact of the change in site power import on emissions from an external power station. Total reduction values are for site + power statio

Utility Balance	Current Operation	After Projects	Reduction	
Power Generation	7354 kW	7354 kW	-	-
Power Import	5000 kW	5000 kW	0 kW	0.0%
Total Site Electrical Demand	12354 kW	12354 kW	-	-
Boiler Duty	414.1 MMBtu/h	413.7 MMBtu/h	0.4 MMBtu/h	0.1%
Fuel Type	Number 2 Fuel Oil	Number 2 Fuel Oil	-	-
Fuel Consumption	2974.5 gal/h	2971.8 gal/h	-	-
Boiler Steam Flow	300.5 klb/h	300.2 klb/h	0.3 klb/h	0.1%
Fuel Cost (in $/MMBtu)	5.89	5.89	-	-
Power Cost (as $/MMBtu)	14.65	14.65	-	-
Make-Up Water Flow	19857 gal/h	19843 gal/h	14 gal/h	0.1%

Stack Loss Calculator

- The stack loss calculator can be used to aid in boiler efficiency project evaluations.

Steam System Assessment Tool

Stack Loss Calculator

Based on user inputs of Stack Temperature, Ambient Temperature and Stack Oxygen Content, an estimate will be provided of the heat loss from the boiler stack. Losses are expressed as a percentage of the heat fired.

Stack losses are related to SSAT Boiler Efficiency as follows:

SSAT Boiler Efficiency = 100% - Stack Loss (%) - Shell Loss (%)

Shell Loss refers to the radiant heat loss from the boiler. Typically <1% at full load, 1-2% at reduced load.

Input Data

Stack Gas Temperature (°F)	420 °F	Stack Temperature - Ambient Temperature = 350°F
Ambient Temperature (°F)	70 °F	

Stack Gas Oxygen Content (%	6 %	

Note: Stack gas oxygen content is expressed on a molar or volumetric basis

Results

Estimated Stack Losses for each of the default fuels are as follows:

Natural Gas	**19.6 %**
Number 2 Fuel Oil	**15.3 %**
Number 6 Fuel Oil (Low Sulfur)	**14.8 %**
Number 6 Fuel Oil (High Sulfur)	**15.0 %**
Typical Eastern Coal (Bituminous)	**13.3 %**
Typical Western Coal (Subbituminous)	**14.9 %**
Typical Green Wood	**25.9 %**

Potential Project - Fuel Selection

- Fuel selection can provide significant reductions in operating costs due to energy costs and maintenance costs.
  - Sometimes these effects are offsetting.
- Interruptible fuel pricing can provide great economic benefits.
- Analysis should include fuel efficiency.

Potential Project - Alternate Fuel

- Fuel switching is a common energy management activity.
- In general, boiler efficiency will change as the fuel is changed.
  - Fuel characteristics will impact stack loss.
  - Boiler characteristics may change.
    - Flue gas temperature may increase due to fouling.
      - Flue gas temperature may change because of combustion zone differences.
    - Flue gas oxygen content may change because of combustion characteristics.

Potential Project - Alternate Fuel

Steam conditions:
400 psig and
700°F

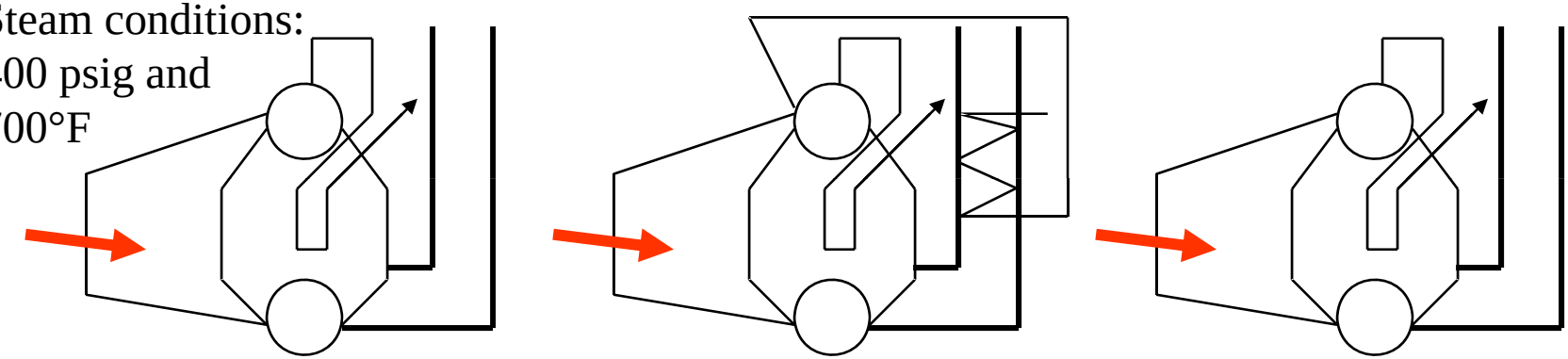

Fuel: Eastern Coal	Fuel: Natural gas	Fuel: Number 2 fuel oil
Fuel cost: $1.75/10^6$Btu	Fuel cost: $4.10/10^6$Btu	Fuel cost: $5.50/10^6$Btu
Boiler capacity: 100,000 lbm/hr	Boiler capacity: 100,000 lbm/hr	Boiler capacity: 100,000 lbm/hr
Steam production: 75,000 lbm/hr	Steam production: 75,000 lbm/hr	Steam production: 50,000 lbm/hr
Flue gas exit T: 440°F	Flue gas exit T: 320°F	Flue gas exit T: 500°F
Flue gas oxygen: 5.0%	Flue gas oxygen: 3.0%	Flue gas oxygen: 5.0%

- Three boilers supply the steam demands of this example.

Potential Project - Alternate Fuel

Steam conditions:
400 psig and
700°F

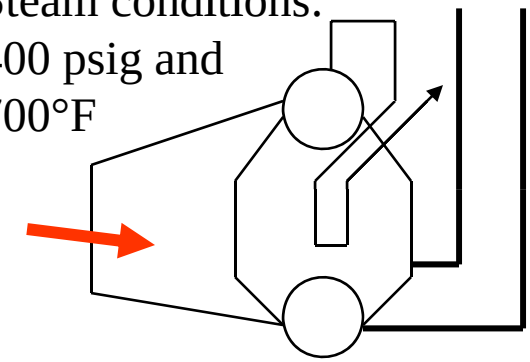

Fuel: Eastern Coal
Fuel cost: $1.75/10^6$Btu
Boiler capacity:
100,000 lbm/hr
Steam production:
75,000 lbm/hr
Flue gas exit T: 440°F
Flue gas oxygen: 5.0%

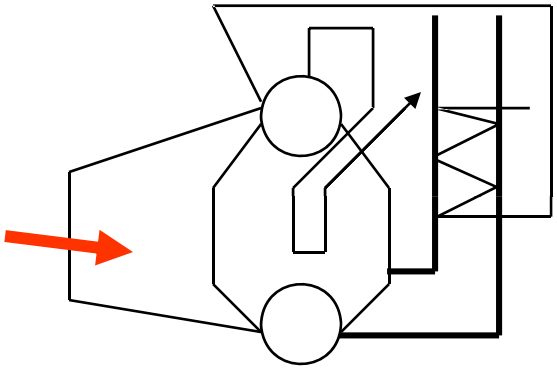

Fuel: Natural gas
Fuel cost: $4.10/10^6$Btu
Boiler capacity:
100,000 lbm/hr
Steam production:
75,000 lbm/hr
Flue gas exit T: 320°F
Flue gas oxygen: 3.0%

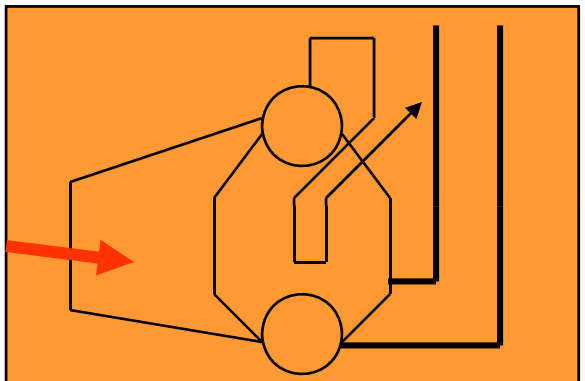

Fuel: Number 2 fuel oil
Fuel cost: $5.50/10^6$Btu
Boiler capacity:
100,000 lbm/hr
Steam production:
50,000 lbm/hr
Flue gas exit T: 500°F
Flue gas oxygen: 5.0%

- The number 2 fuel oil boiler will be equipped with natural gas burning capability (simultaneous)

Boiler Blowdown

- Boiler blowdown is included in the SSAT model.

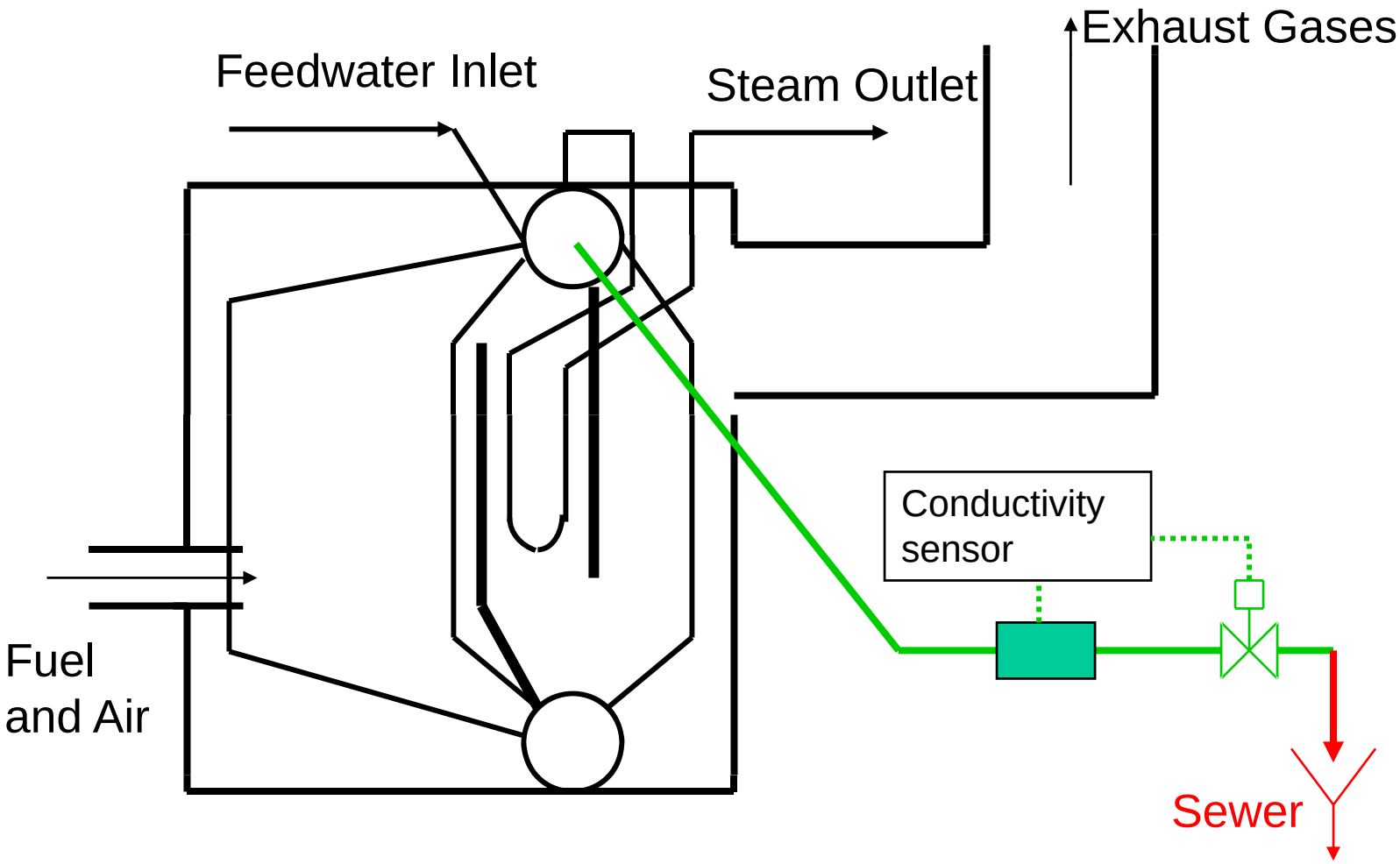

Potential Project - Blowdown Energy Recovery

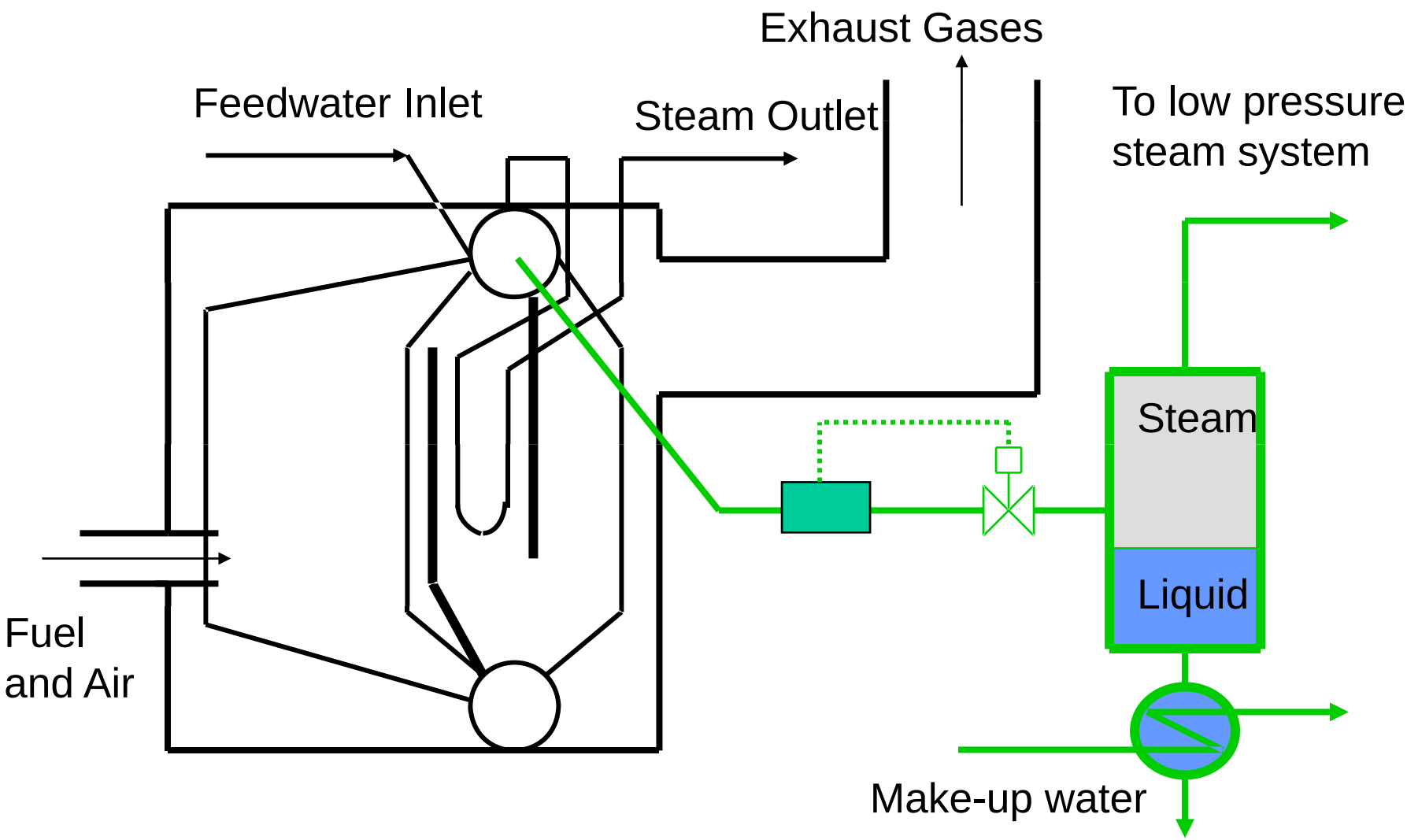

Potential Projects - Steam Turbines

- Steam turbines are integral components in many steam systems.
- Steam turbine investigations commonly include:
  - new turbine installation,
  - on-off decisions,
  - efficiency impacts,
  - turbine-PRV operations,
  - condensing turbine operations.

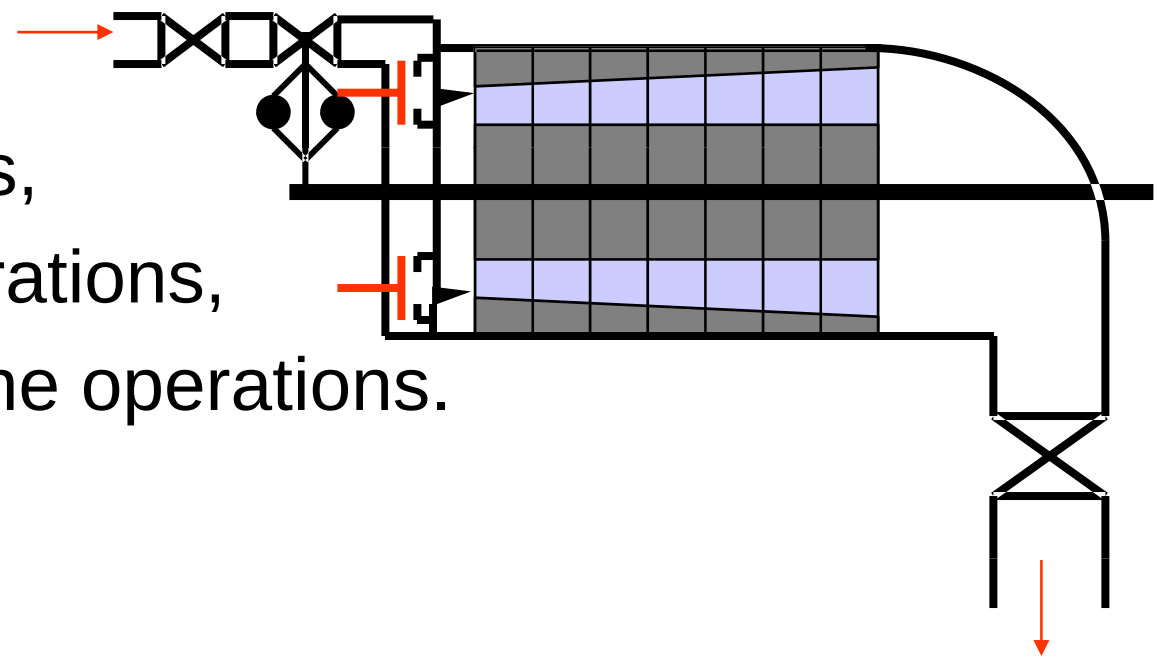

SSAT Turbine Projects

Project 9 - MP to LP Steam Turbine(s)
Efficiency : 55% Operation : Operates between minimum and maximum steam flows

Do you wish to modify the MP to LP turbine operation?		No
If yes, select the appropriate turbine operating mode		Option 1 - Balances LP header
Specify a new isentropic efficiency [%]	70 %	

Note: A generator electrical efficiency of 100% is assumed by the model
Note: Isentropic efficiency of existing turbine is 55%

Option 2 - How do wish to define the fixed turbine operation?		Option 2 not selected
Option 2 - Fixed steam flow	100 klb/h	
Option 2 - Fixed power generation	2000 kW	
Option 3 - How do wish to define the operating range?		Option 3 not selected
Option 3 - Minimum steam flow	50 klb/h	
Option 3 - Maximum steam flow	150 klb/h	
Option 3 - Minimum power generation	1500 kW	
Option 3 - Maximum power generation	2500 kW	

Project 10 - HP to Condensing Steam Turbine(s)
Efficiency : 61% Operation : Operates at fixed power generation

Do you wish to modify the HP to condensing turbine operation?		No, maintain current operation
If yes, enter a new isentropic efficiency [%]	70 %	

Note: A generator electrical efficiency of 100% is assumed by the model
Note: Isentropic efficiency of existing turbine is 61%

If yes, select the units to specify the condenser pressure		psia
New condenser pressure [psia]	2	

Note: Existing condenser pressure is 2.1 psia

If yes, select the new mode of operation		Option 1 - Fixed power generation
Option 1 - Fixed power generation	1000 kW	
Option 2 - Fixed steam flow	50 klb/h	

Steam Demand

- Steam demands take on many different forms.
- Reducing steam consumption can often result in the most significant energy reduction opportunities.
  - Control parameter changes.
  - Thermal energy recovery.
  - Vent steam elimination.
  - Supply pressure selection.
  - Primary energy resource selection.

Potential Project - Steam Demand

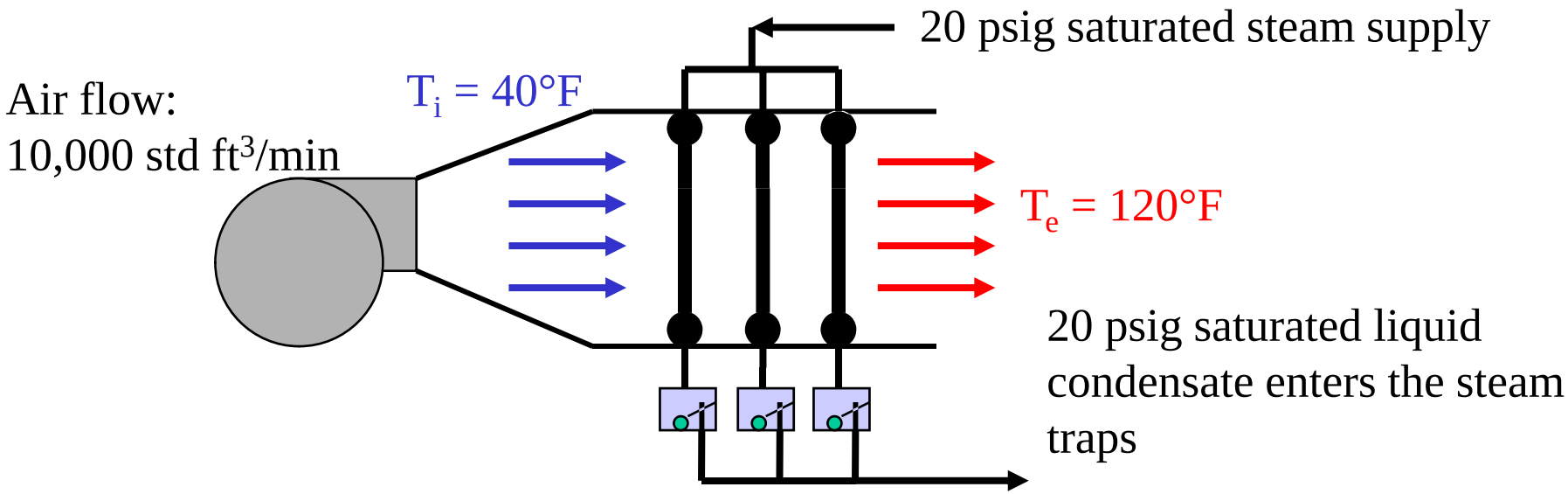

- A process requires air to be heated to 120°F
  - Low-pressure steam is used in the service
- Outside air is currently being supplied to the process

Potential Project - Steam Demand

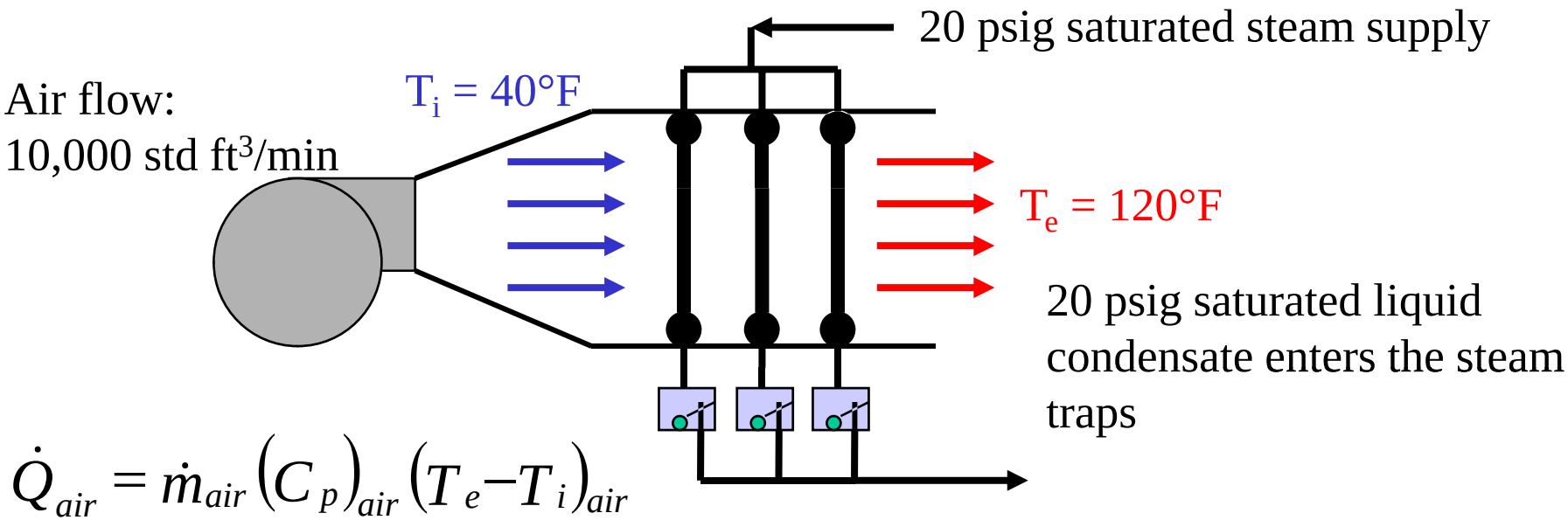

$$\dot{Q}_{air} = \dot{m}_{air}\left(C_p\right)_{air}\left(T_e - T_i\right)_{air}$$

$$\dot{Q}_{air} = 10{,}000\,\frac{std\ \ ft^3}{min}\left(0.074\,\frac{lbm}{std\ \ ft^3}\right)\left(0.24\,\frac{Btu}{lbm^\circ R}\right)\left(120^\circ F - 40^\circ F\right)\left(\frac{60\ min}{1\ hr}\right)$$

$$\dot{Q}_{air} = 854{,}200\,\frac{Btu}{hr}$$

Potential Project - Steam Demand

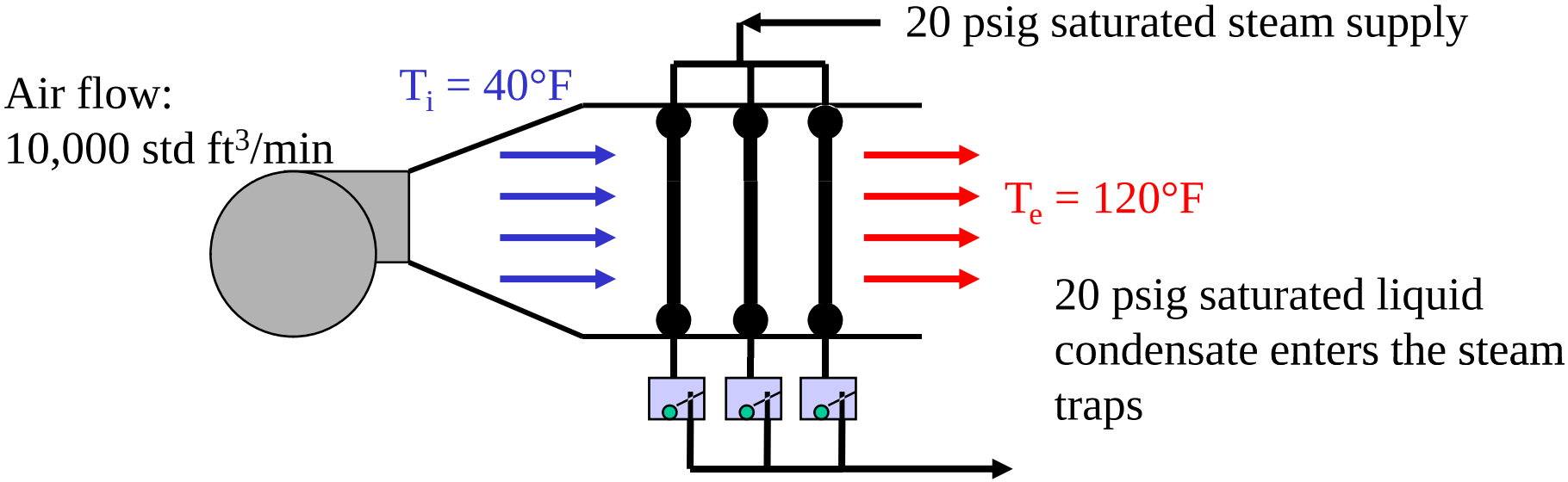

$$\dot{Q}_{steam} = -\dot{Q}_{air} = -854{,}200\,\frac{Btu}{hr} = \dot{m}_{steam}\left(h_e - h_i\right)_{steam}$$

$$\dot{m}_{steam} = \frac{854{,}200\,\frac{Btu}{hr}}{\left(1{,}246.85\,\frac{Btu}{lbm} - 227.40\,\frac{Btu}{lbm}\right)} = 838\,\frac{lbm}{hr}$$

Potential Project - Steam Demand

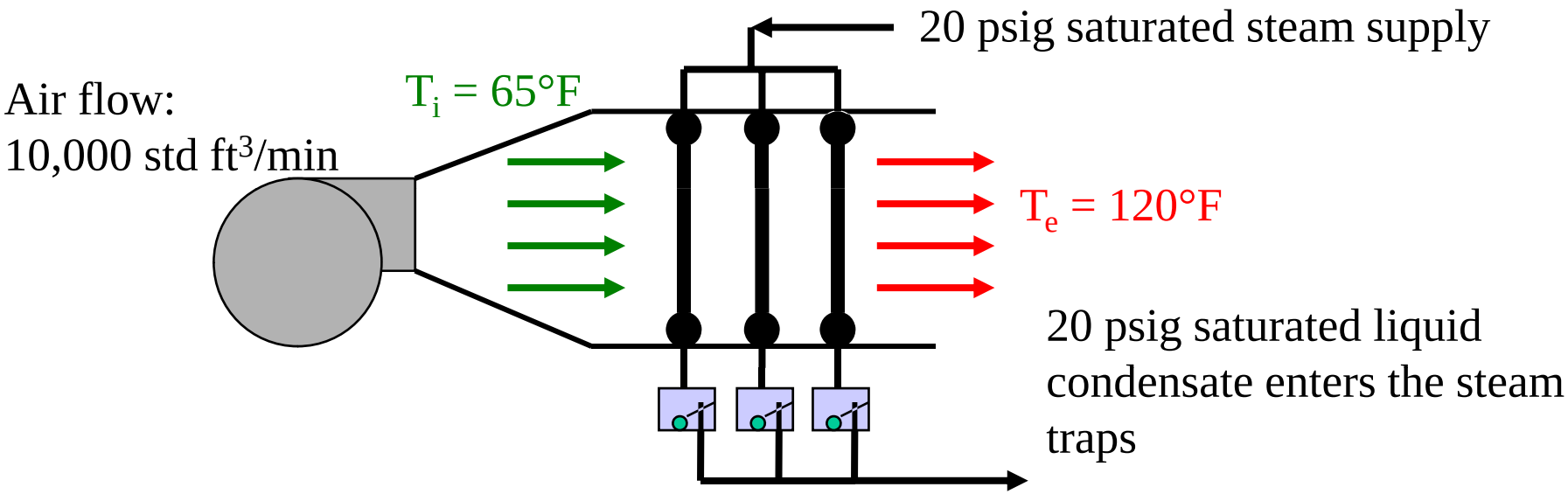

- Process exhaust or building exhaust can provide an elevated temperature air stream
  - Ventilation issues must be considered
  - Air quality issues must be considered

Potential Project - Steam Demand

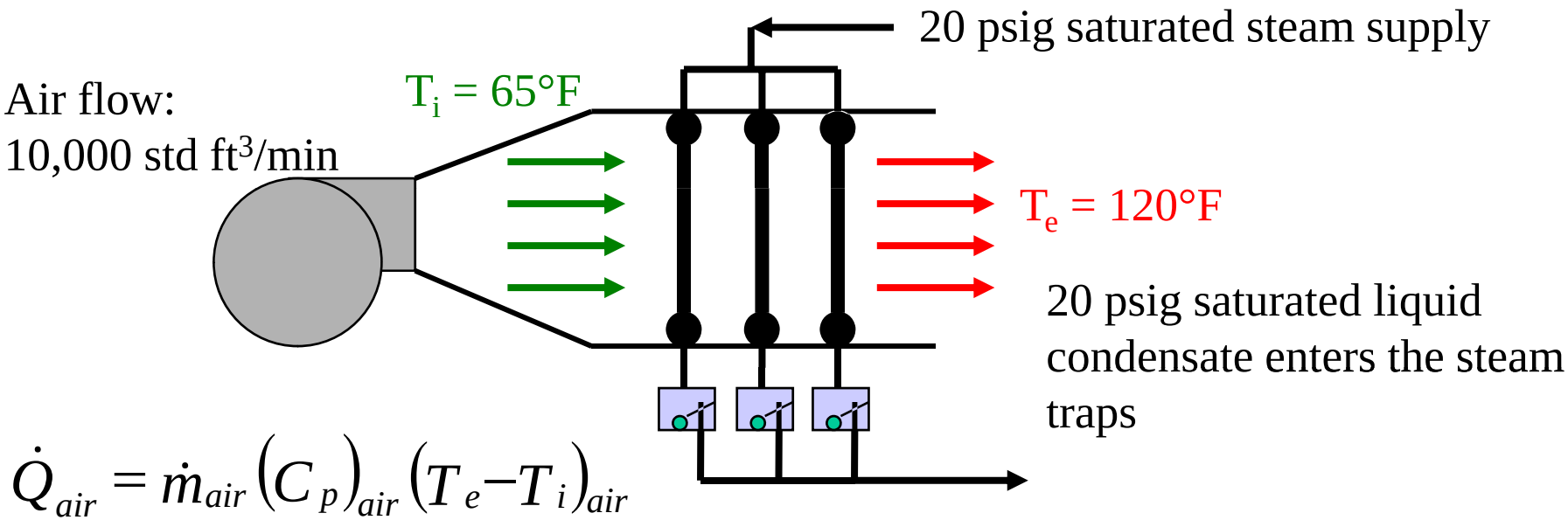

$$\dot{Q}_{air} = \dot{m}_{air}\left(C_p\right)_{air}\left(T_e - T_i\right)_{air}$$

$$\dot{Q}_{air} = 10{,}000\,\frac{std\ \ ft^3}{min}\left(0.074\,\frac{lbm}{std\ \ ft^3}\right)\left(0.24\,\frac{Btu}{lbm^\circ R}\right)\left(120^\circ F - 65^\circ F\right)\left(\frac{60\ min}{1\ hr}\right)$$

$$\dot{Q}_{air} = 587{,}300\,\frac{Btu}{hr}$$

Potential Project - Steam Demand

Air flow:
10,000 std ft^3/min

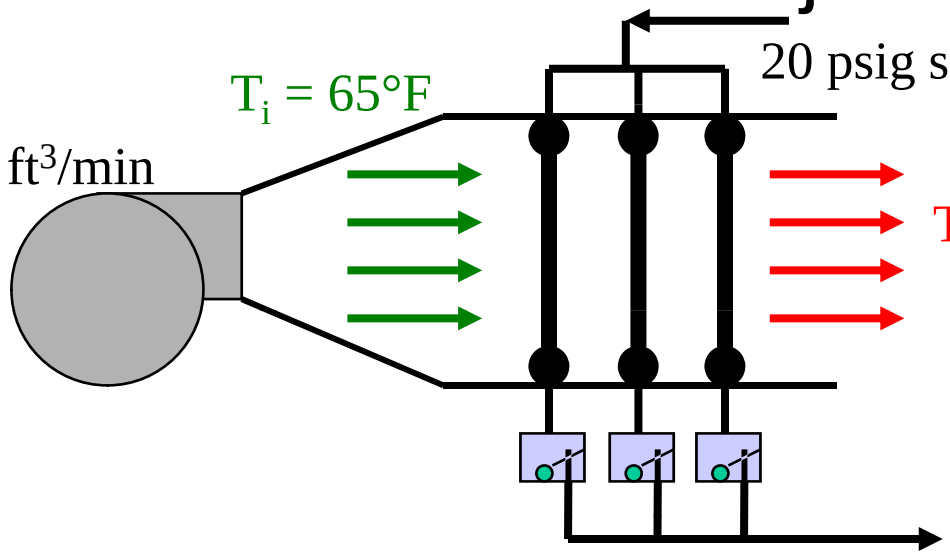

20 psig saturated liquid condensate enters the steam traps

$$\dot{Q}_{steam} = -\dot{Q}_{air} = -587{,}300\,\frac{Btu}{hr} = \dot{m}_{steam}\left(h_e - h_i\right)_{steam}$$

$$\dot{m}_{steam} = \frac{587{,}300\,\frac{Btu}{hr}}{\left(1{,}246.85\,\frac{Btu}{lbm} - 227.40\,\frac{Btu}{lbm}\right)} = 576\,\frac{lbm}{hr}$$

- Steam demand reduced approximately 260 lbm/hr
  - If the steam cost is \$7.00/10^{3}lbm the savings is approximately \$16,000/yr

Project 1 - Steam Demand Savings (Changing the process steam requirements)
Current use - HP: 10 klb/h (9.33 MMBtu/h) MP: 40 klb/h (39.09 MMBtu/h) LP: 200 klb/h (210.10 MMBtu/h)

Do you wish to specify steam demand savings?	Yes

If yes, enter HP steam saving	0 klb/h	
If yes, enter MP steam saving	0.26 klb/h	
If yes, enter LP steam saving	0 klb/h	

Steam Leaks

Orifice Diameter [inch]	Leak Rate [lbm/hr]						
	Steam Supply Pressure [psig]						
	25	50	100	175	300	400	430
1/16	4	6	11	18	30	39	42
1/8	15	25	43	72	119	157	168
3/16	34	55	98	162	268	353	379
1/4	60	98	174	287	477	628	674
5/16	94	153	271	449	745	981	1,052
3/8	135	221	391	647	1,073	1,413	1,516
7/16	184	300	532	880	1,460	1,924	2,063
1/2	241	392	695	1,149	1,907	2,513	2,694
	5	18	43	80	143	193	208
	Discharge Pressure [psig]						
Discharge coefficient	0.6 dimensionless						

World Class Steam Trap Maintenance Program

- Training is essential
- Investigate each trap at least one time each year
  - Performance
  - Trap type
  - Installation
  - Condensate return
  - Establish an investigation route
- Maintain a steam trap database
- Prioritize repairs based on loss estimates
- Daily monitor receiver vents

Potential Project - Condensate Recovery

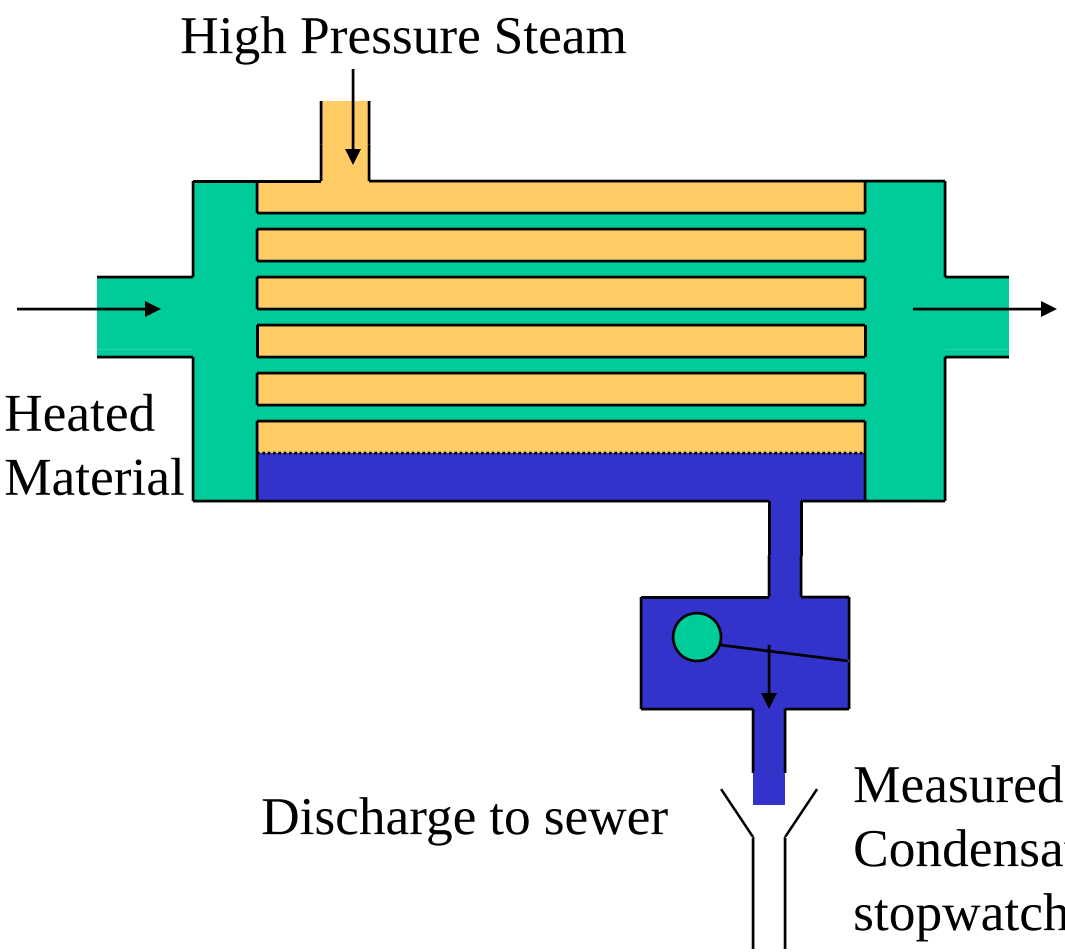

Measured condensate temperature 212°F
Condensate flow measured by bucket and stopwatch (mass and energy balance is also a common method) to be 10 gallons/minute (5,000 lbm/hr)

Potential Project - Condensate Recovery

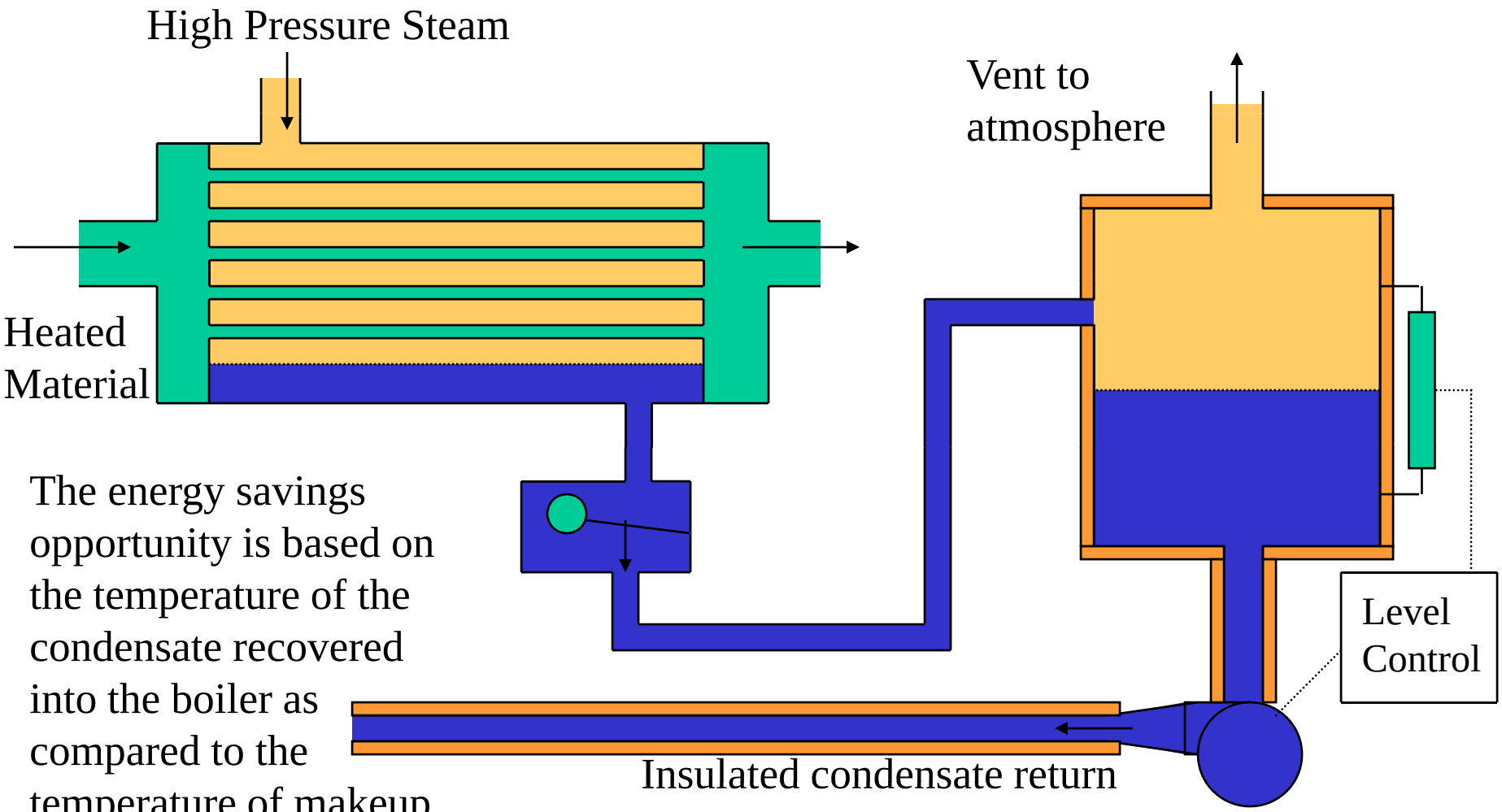

The energy savings opportunity is based on the temperature of the condensate recovered into the boiler as compared to the temperature of makeup water

Potential Project - Condensate Recovery

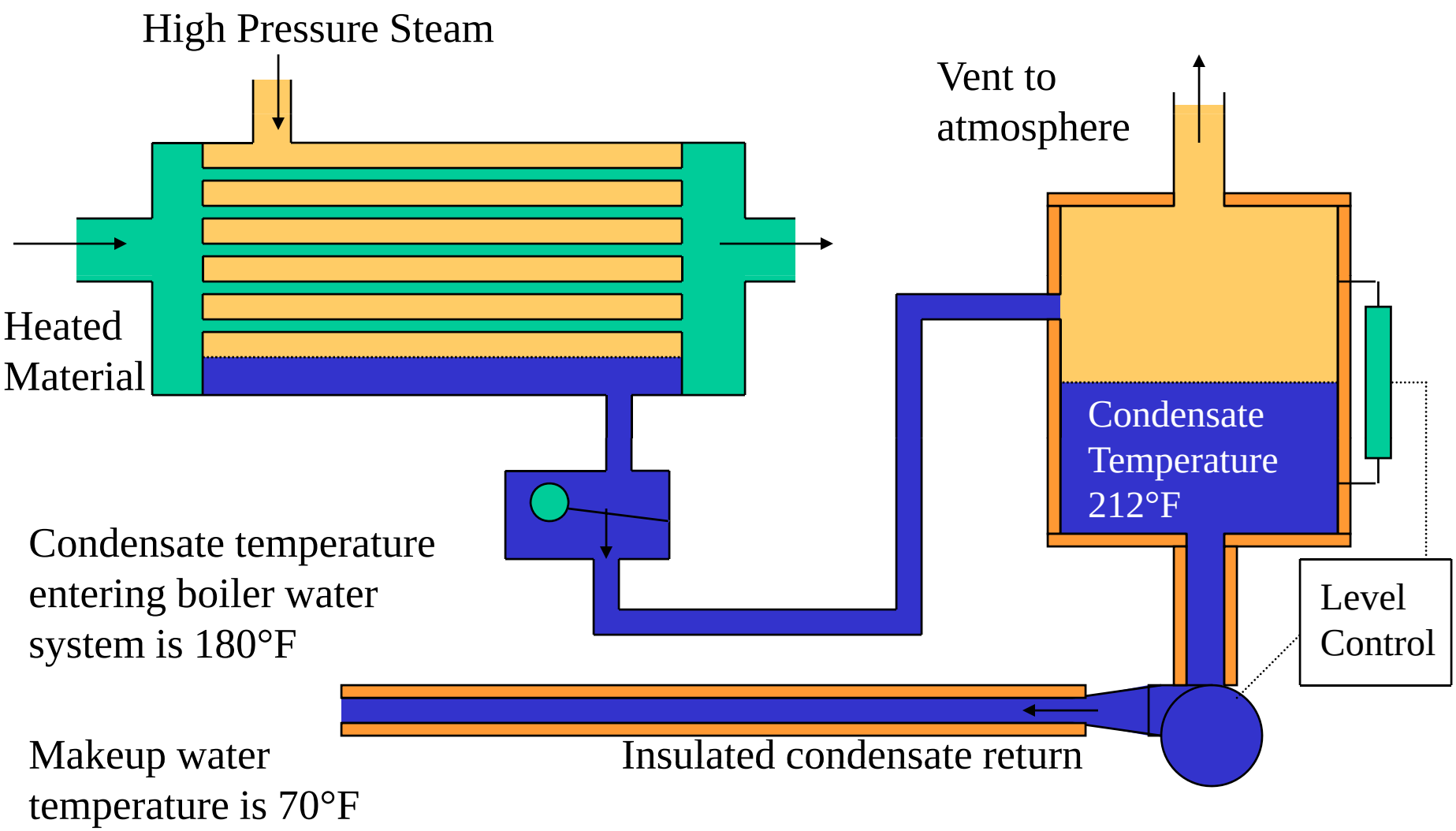

Potential Project – Flash Steam Recovery

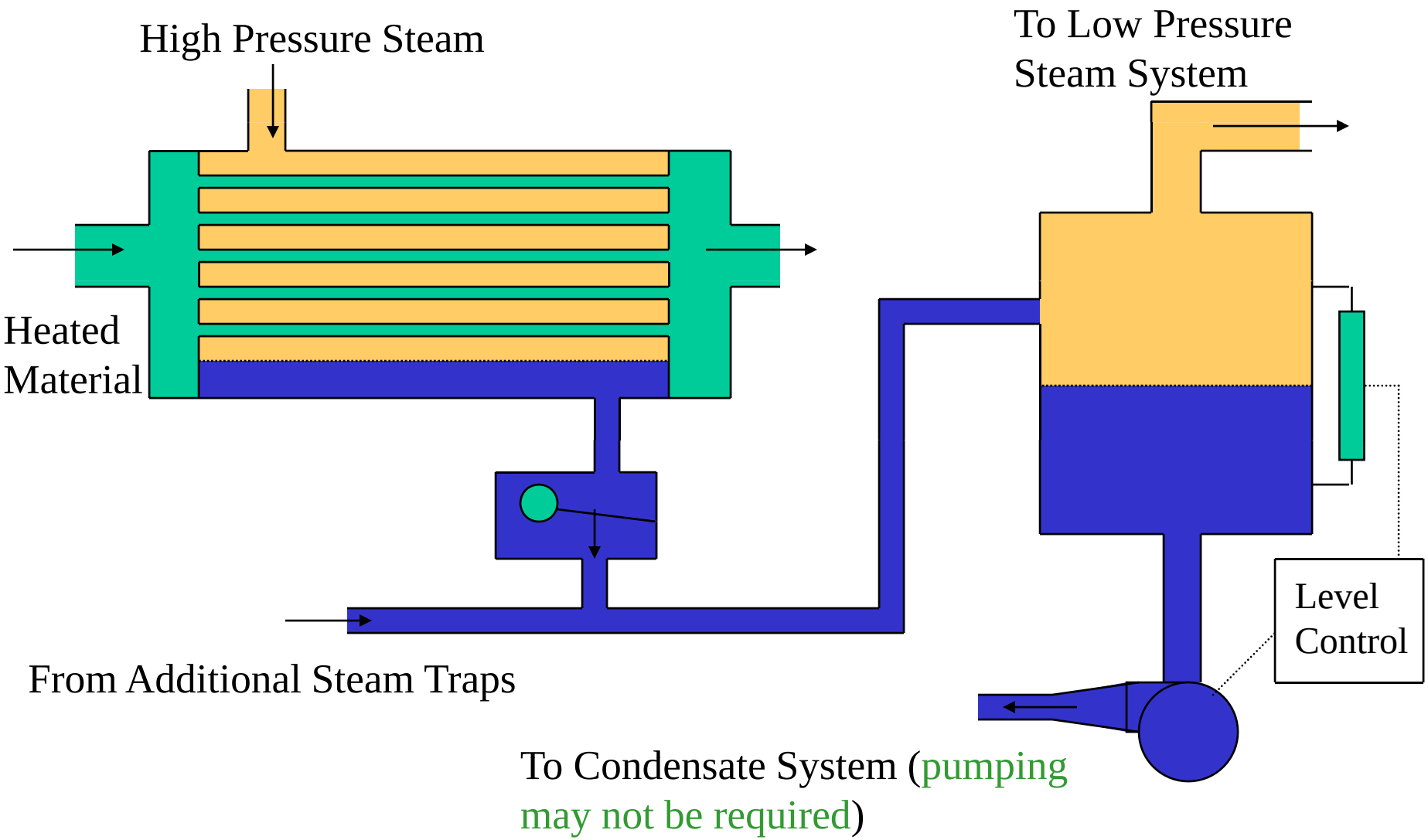

SSAT Condensate Projects

Project 13 - Condensate Recovery
Currently recover 20% of HP, 60% of MP and 40% of LP at 180 F

Do you wish to specify new condensate recovery rates?	Yes

If yes, enter new HP condensate recovery	75 %	
If yes, enter new MP condensate recovery	75 %	
If yes, enter new LP condensate recovery	75 %	

Note: Condensate return temperature will be assumed to be 180 F as for the current operation

Project 14 - Condensate Flash to MP
Not currently installed

Do you wish to modify the MP condensate flash system?	Yes, install condensate flash to MP

Project 15 - Condensate Flash to LP
Not currently installed

Do you wish to modify the LP condensate flash system?	Yes, install condensate flash to LP

Common Insulation Issues

- Missing insulation due to maintenance activities.
- Missing insulation due to abuse.
- Damaged insulation.
- Valves and other components not insulated.

Insulation Tool – 3E-Plus

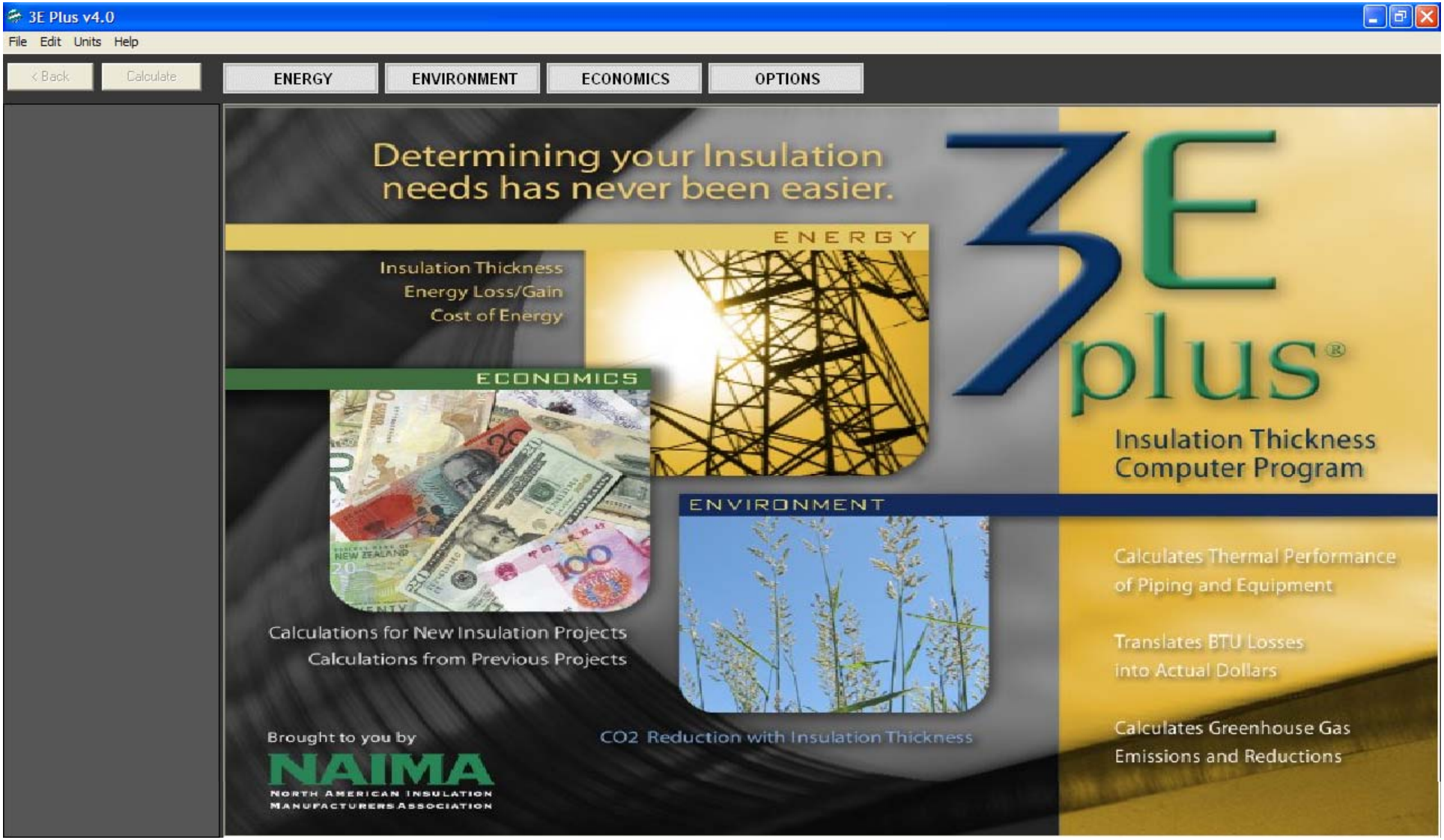

3E-Plus – Project Input

< Back | Calculate | ENERGY | ENVIRONMENT | ECONOMICS | OPTIONS

INSULATION THICKNESS
Surface Temperatures
Condensation Control
Personnel Protection

COST OF ENERGY
Bare and Insulated Surfaces

Insulation Thickness

Item Description: Steam Header
System Application: Pipe - Horizontal
System Units: ASTM C585

Fuel Type: Natural Gas
Heat Content: 1026 Btu/cuft
Fuel Cost: 7 $/Mcf
Efficiency: 100 %

Process Temp: 400 °F
Ambient Temp: 80 °F
NPS Pipe Size: 14

Wind Speed: 3 mph
Annual Operation: 8760 hrs / yr

Insulation Layers

Add | Delete

#	Type	Name	Lock Thickness	Thickness, Inches
	Base Metal	Steel		
1	Insulation	Calcium Silicate BLK+PIPE, Type I, C533-04	Fix	3
2	Jacket Material	0.1 Aluminum, oxidized, in service	Vary	

3E-Plus – Insulation Savings

< Back | Calculate | ENERGY | ENVIRONMENT | ECONOMICS | OPTIONS

INSULATION THICKNESS
Surface Temperatures
Condensation Control
Personnel Protection

COST OF ENERGY
Bare and Insulated Surfaces

Cost of Energy

Item Description: **Steam Header** System Units: **ASTM C585**
Geometry Description: **Steel Pipe - Horizontal**
Bare Surface Emittance: **0.8** Nominal Pipe Size: **14 in.**
Process Temp: **400 °F** Ave. Ambient Temp: **80 °F** Ave. Wind Speed: **3 mph**
Fuel: **Natural Gas** Heat Content: **1026 Btu/cuft**
Fuel Cost: **7 $/Mcf** Efficiency: **75%**
Outer Jacket Material: **Aluminum, oxidized, in service** Outer Surface Emittance: **0.1**
Insulation Layer 1: **Calcium Silicate BLK+PIPE, Type I,** Thickness: **2.96 in.**

Append To Audit | Browse...

Variable Insulation Thickness	Cost ($/ft/yr)	Heat Loss (BTU/ft/yr)	Savings ($/ft/yr)
Bare	239.00	35040000	
Layer 1	12.35	1810000	226.600

3E-Plus – Installation Cost

Cost and Thickness Data

Surface Number: 19 Pipe Size: 14

Single Layer		Double Layer		Triple Layer	
Thick	Cost	Thick	Cost	Thick	Cost
1	0.00	3	46.76	6	96.74
1.5	27.76	4	59.92	7	111.10
2	31.78	5	72.78	8	125.47
2.5	35.86	6	85.88	9	139.84
3	39.98	0	0.00	10	154.21
4	48.95	0	0.00	0	0.00

< Back Next > Calculate

Preparation Summary

- Concentrate on the following activities prior to the onsite portion of your Training-Assessment.
  - Complete the SSST evaluation of your site.
    - Send the completed version to your ESA Expert.
  - Become familiar with the U.S.DOE Steam Tools.
  - Develop a *Potential Project List*.
  - Contact your ESA Expert when you have questions.