2022 DOE Vehicle Technologies Office Annual Merit Review Presentation

Articulated Dump Truck (ADT) Electrification - GHG Reductions and Commercialization of New Technology in Construction Vehicles Flee

Project PI: Brij Singh, Ph.D., IEEE Fellow & John Deere Technical Fellow
John Deere Inc, USA
June 22, 2022

U.S. DEPARTMENT OF ENERGY | JOHN DEERE

Project ID # ACE183

This presentation does not contain any proprietary, confidential, or otherwise restricted information

Company Use

Overview

Timeline

- Project start date: June/July 2022
- Project end date: Aug/Sept 2025
- Percent complete: 0%

Budget

- Total project funding
  - DOE share: $2,756,732
  - Contractor share: $1,058,332
- Funding for FY 2022: $1,429,502
- Funding for FY 2023: ----

Barriers and Technical Targets

- ADT is a construction vehicle and has ~78% idling time and consumes GHG intensive fossil fuel
- Ruggedized and reliable diesel-electric-hybrid powertrain doesn't exist in Deere & Company and there are no suppliers of this technology
- Vehicle level integration for SiC inverter, SiC non-isolated DC/DC converter, SiC/Si isolated DC/DC converter and 350V/700V battery-pack has too many unknowns to be resolved for production intent program started in Deere & Company

Partners

- North Carolina State University
- University of Arkansas
- Project Lead: John Deere

Company Use

Relevance

- Objective of FOA 'DE-FOA-0002475' is "Low Greenhouse Gas (GHG) Vehicle Technologies Research, Development, Demonstration and Deployment"

- John Deere has many improvements to make in its Construction, Mining, and Agriculture vehicles to offer clean energy solutions
  - ADT is an appropriate platform to validate GHG reduction technologies

- Elimination of ADT idling needs replacement of the conventional hydrostatic drivetrain by diesel-electric-hybrid powertrain, resulting in electrified ADT (eADT)

- Proposed diesel-electric-hybrid powertrain will result in over 20% fuel savings in eADT

- Projected fuel savings will lead to over 10,000 metric tons GHG reduction in fleets of eADT

- When deployed across many off-road vehicle platforms, proposed diesel-electric-hybrid powertrain system is expected to offer multi-million metric tons GHG reduction

Company Use

Milestones

- FY2022-FY2023 (Budget Period 1) Milestones are indicated in Table

Milestone	Type	Description
Dynamic System Modeling (DSM) simulation of representative ADT test bed drivetrain	Technical	Determine configuration data and input technical data (e.g., technical assumptions) for DSM simulation using virtual eADT test bed system) test bed
Design optimization of both power converters	Technical	Evaluate and estimate power-density, efficiency, and maximum loading data for SiC inverter and SiC/Si DC/DC converter based on configuration and technical assumptions for DSM.
Life assessment of 700V Li-Ion battery-pack	Technical	Using charge data and discharge data from DSM analysis, determine if Li-Ion battery (or energy data storage) meets > (target hours life (e.g., 15,000 hours life)
Reliability/durability analysis of the eADT's powertrain	Technical	Thermal analysis (e.g., temperature sweep) by DSM and room temperature operational life of diesel-electric-hybrid estimated
Determine specifications of power electronic components for the diesel-electric-hybrid powertrain	Go/No-Go	Determine written specifications of power electronic components for diesel-electric-hybrid powertrain - based on DSM Analysis indicates if eADT test bed life > target hours life (e.g.,15,000 hours)

Company Use

Approach

- Technical approach in execution of this project is stated as:

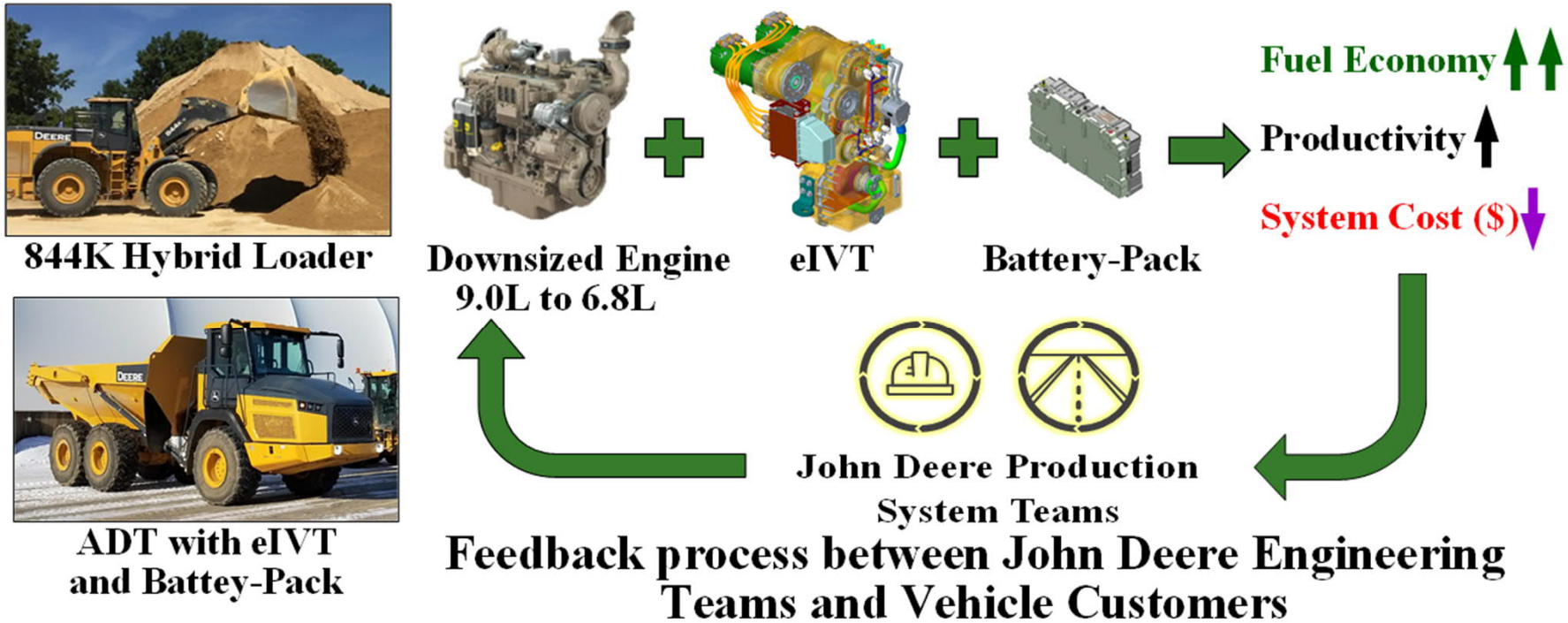

Figure 1: Components of diesel-electric-hybrid powertrain for eADT

Company Use

Approach

- Technical approach in execution of this project is stated as - continued:

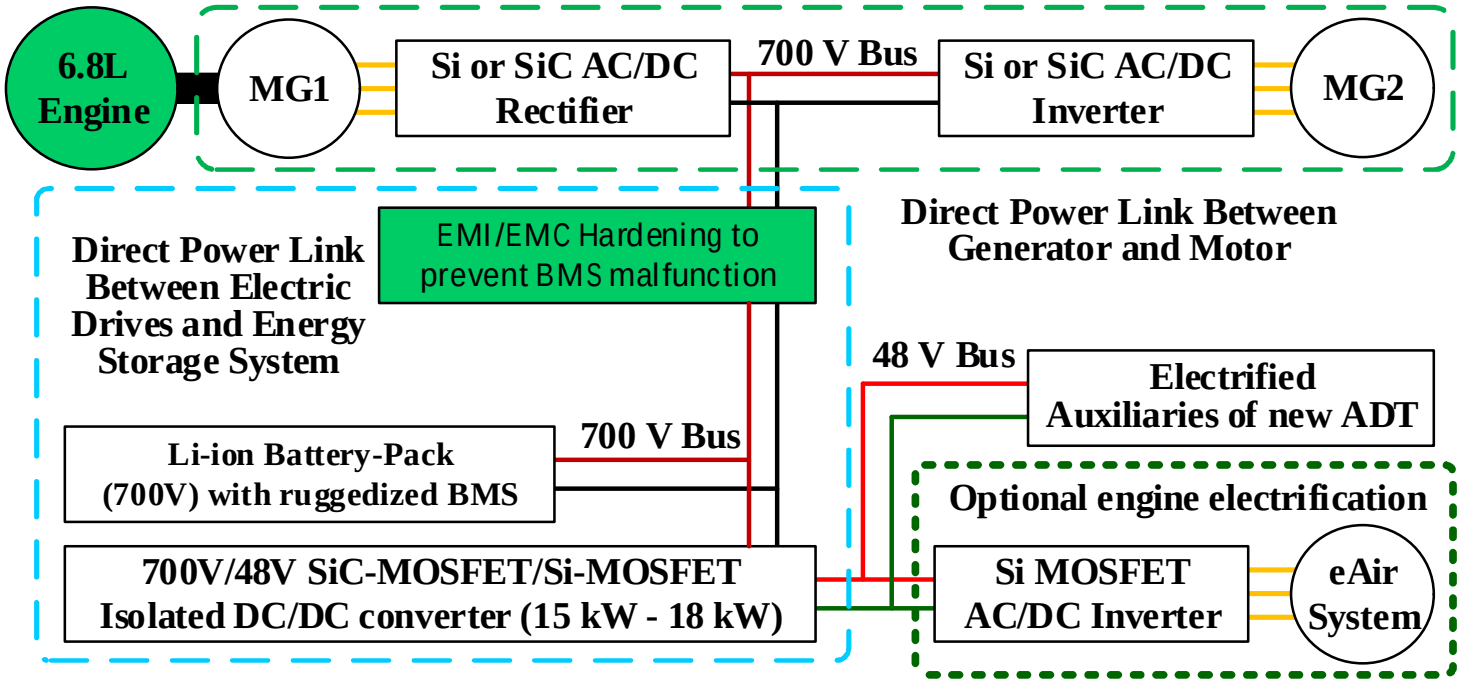

Figure 2: Electrical block-diagram of diesel-electric-hybrid powertrain for eADT

Company Use

Approach

- Technical approach in execution of this project is stated as - continued:
  - Design of Components for the Diesel-Electric-Hybrid Powertrain
    - Dynamic System Modeling (DSM) of diesel-electric-hybrid powertrain will be carried out
      - Develop specifications for all vital components of diesel-electric-hybrid powertrain
        - SiC dual inverter - expected power rating 250 kW
        - SiC non-isolated DC/DC converter (optimal but needed to mitigate risks)
        - SiC/Si Isolated DC/DC converter - expected power rating
        - Li-Ion battery-pack - expected capacity 80 kWhr
    - Design analysis of components in SiC/Si DC/DC converter will use
      - Matlab/Simulink/PLECS
    - Design analysis of soft-switched SiC inverter will use
      - Multi-objective design optimization technique
    - Li-Ion battery-pack sizing and its thermal management requirements will be captured using
      - Dynamic System Modeling of the eIVT (electric Infinitely Variable Transmission)

Company Use

Approach

- Technical approach in execution of this project is stated as - continued:
  - Fabrication, Testing, & Characterization of Components for the Diesel-Electric Hybrid Powertrain
    - Enabling parts of diesel-electric-hybrid powertrain are needed
    - Fabricated parts and components will be validated for design specifications
      - Bench-top testing
      - Back-to-back motor dynamometer-based testing

  - In-vehicle Integration of Diesel-Electric-Hybrid Powertrain and Technology Validation
    - Value propositions
      - Fuel economy established by measurement
      - Productivity established by measurement/calculations
      - System costs projected by assessment
    - Data/information released for production intent eADT program in Deere & Company

Company Use

Technical Accomplishments and Progress

- Project was not started at time of submission of this report

- John Deere suppliers have been informed about design needs for diesel-electric-hybrid powertrain's components
  - Many brainstorming meetings have taken place within John Deere
  - Confidentiality agreements have been signed with project partners
    - NC State University
      - Technology innovation for parts needed for power-dense isolated DC/DC converter
    - University of Arkansas
      - Soft-switched SiC inverter scaled up to 250 kW

Company Use

Responses to Previous Year Reviewers' Comments

- New project

Company Use

Collaboration and Coordination with Other Institutions

- Project will have significant level of collaborations with following two universities
  - North Carolina State University - led by Dr. Subhashish Bhattacharya
    - Isolated DC/DC converter
  - University of Arkansas - led by Dr. Yue Zhao
    - Soft-switched SiC inverter

Company Use

Remaining Challenges and Barriers

- Not applicable
  - New project

Company Use

Proposed Future Research

- Not applicable
  - New project

Company Use

Mandatory Summary Slide

- Project has not yet started
  - John Deere traditionally never competed for government
    - Needed to overcome some learning curve in signing agreement with DOE
  - It took more than anticipated time to negotiate IP, data rights and project accounting
  - Four units of Deere & Company will be contributing in execution of this project
    - Internal alignment including potential applications of proposed diesel-electric-hybrid powertrain in many off-road vehicles - assessment took quite a bit time
  - Project is likely to start in June/July 2022
    - Project team will leverage experiences from electrification of many vehicles in Deere

Company Use