Project ID
ace185

High Efficiency, Ultra Low Emissions Heavy-Duty 10 Liter Natural Gas Engine Project

Principal Investigator
Tim Lutz

Date June 23, 2022

This presentation does not contain any proprietary, confidential, or otherwise restricted information

Public

Overview

Timeline

- Start: February 2022
- End: April 2025
- Percent Complete: 7%

Will be managed in three Budget Periods (BP)

- BP1: Feb 2022 – Apr 2023
- BP2: Mar 2023 – Apr 2024
- BP3: Mar 2024 – Apr 2025

Barriers

- Knock avoidance with high power density combustion system
- High exhaust temperatures associated with high power density, stoichiometric combustion
- Misfire avoidance and accurate fueling control at low loads

Budget

- Total: $6.67M Total/3.25 years
- DOE: $4.00M
- Cummins: $2.67M

- Budget Period 1: $1.60M Total (Feb 22-Apr 23)
- DOE: $0.96M
- Cummins: $0.64M

Partners

- None
  - Cummins is the sole participant in this project

Relevance

- Natural Gas Offers:
  - An inherent advantage for CO2 emissions over other fossil fuels due to its lower carbon to hydrogen ratio
    - Renewable natural gas has an even lower and potentially negative carbon impact
  - Reduced dependence on foreign energy sources
  - Lower cost aftertreatement (three-way catalyst) for ultra-low NOx emissions
  - A low carbon opportunity for hard to electrify transportation sectors
- This project will address barriers to adoption of natural gas in heavy duty transportation by
  - Increasing power density to meet demands of this market by:
    - Developing a combustion system to significantly reduce potential for knock and misfire
    - Improving engine efficiency
    - Managing exhaust temperatures
  - Reducing overall greenhouse gas (GHG) impact by reducing tailpipe methane emissions
  - Maintaining ability to hit ultra low NOx targets of 0.02 g/hp-hr while meeting all other 2027 EPA/CARB requirements for criteria emissions
- A high efficiency natural gas engine provides an excellent platform to build up on for future hydrogen internal combustion engines

Milestones

Month/Year	Milestone	Type	Description	Status
May 2022	Rating Target Determine	Technical	Cylinder head design work started and simulation work started	On Target
June 2022	Engine Simulation Model Created	Technical	Initial Engine Simulation model created	On Target
August 2022	EGR decision	Technical	Simulation work complete to determine if EGR is needed/desired to meet program targets	On Target
March 2023	Cylinder Head design complete	Technical	Cylinder Head design complete	On Target
April 2023	Simulation analysis shows that engine can meet targets	Go/No Go	Simulation shows that engine can meet torque, power, and BTE targets	On Target

Approach

Current state of the art natural gas engines are based on their diesel counterparts, retaining much in common with the diesel engine

Cooled EGR
- Reduces combustion & exhaust temperatures
- Moderate Efficiency and Power Density Improvement

Combustion System

Flat Deck Head with Swirl
- Does not promote fast combustion
- Limits power density due to knock
- Misfire risk at low load
- Thermal stress challenges

Low Compression Ratio Piston
- Required for knock mitigation & power density
- Reduces efficiency

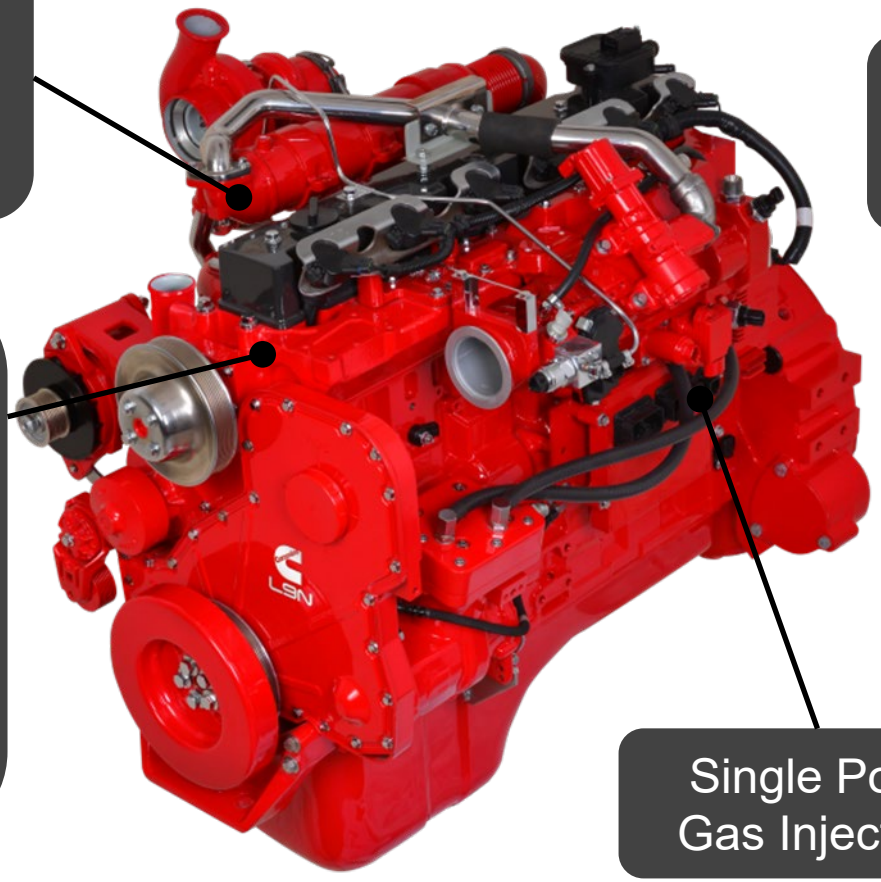

0.02 g/hp-hr NOx

Stoichiometric combustion with three way catalyst

Single Point Gas Injection

Approach

We will design and optimize engine components specifically for high power density, efficient natural gas combustion

- Exhaust system design will be designed for efficient flow to minimize residual gas trapped in the cylinder and reduce knock
- CFD flow and heat transfer analysis will be used to optimize flow passages and assess ability to manage exhaust temperature
- Premium exhaust system materials may be used if required
- Close coupled three way catalyst for efficient NOx reduction and CH4 oxidation

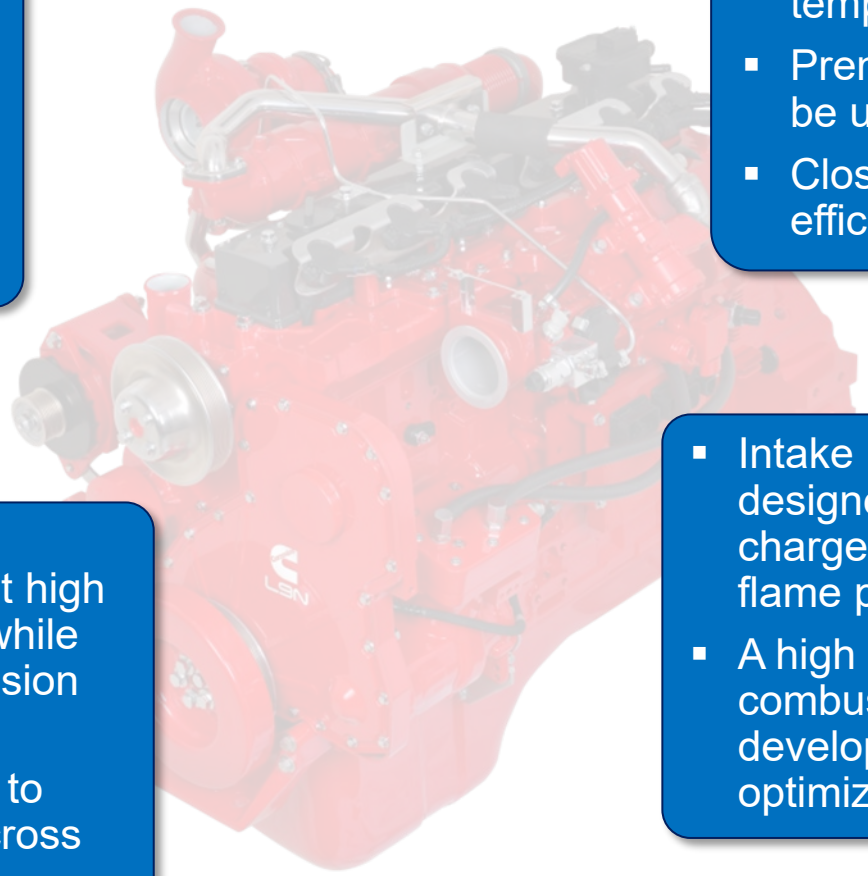

- Variable valve timing will be used to reduce effective compression ratio at high loads, enabling high power density while maintaining high geometric compression ratio for high efficiency at part load
- Engine cycle simulation will be used to optimize valve profiles and timing across the operating range

- Intake ports with port fuel injectors will be designed using CFD analysis to generate charge motion that promotes fast, efficient flame propagation
- A high compression ratio piston and other combustion system features will be developed using combustion CFD to optimize efficiency and minimize knock risk

Technical Accomplishments and Progress

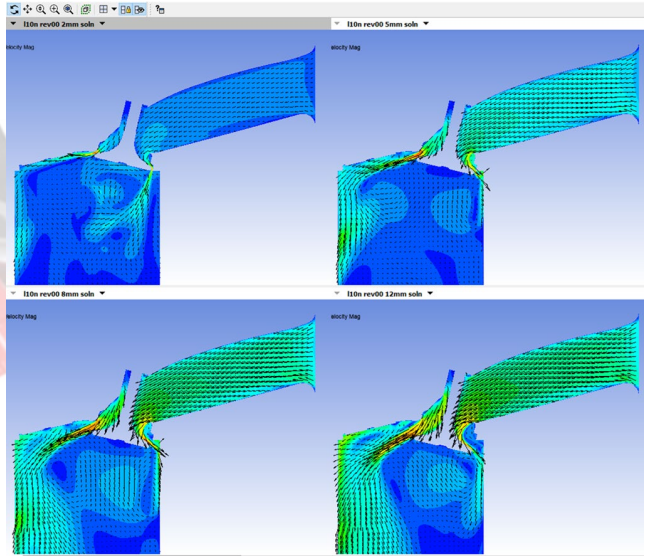

Design work on the cylinder head has started with CFD for port development

Initial focus is on cooling passage & port design

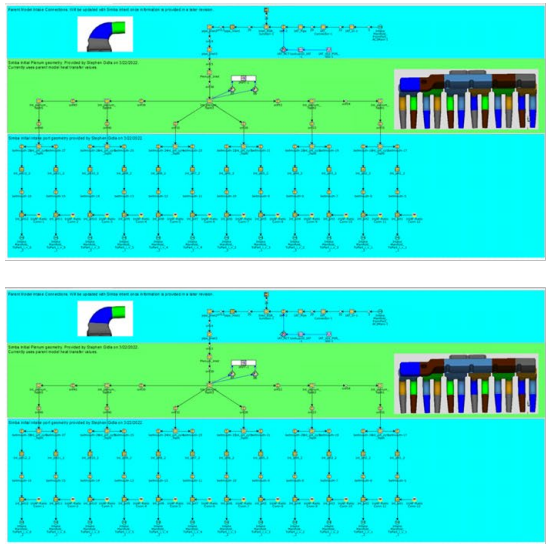

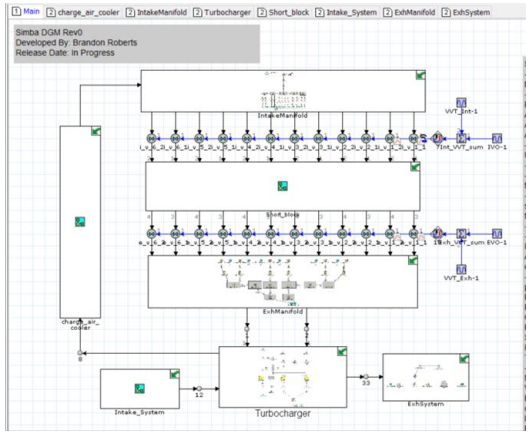

Engine cycle simulation model created

Calibration details are being finalized in parallel to initial runs for valve timing studies

Remaining Challenges and Barriers

- Key decisions to be made
  - EGR vs No-EGR (Aug 2022 milestone)
    - Presumptive direction is to have a no-EGR solution
      - EGR can increase closed cycle efficiency but comes at the expense of lower open cycle efficiency
      - EGR has mixed results on knock
        - Reduced combustion temperature reduces risk of knock but reduced flame speed increases risk of knock
  - Exhaust Temperature Management
    - This is a factor in EGR decision
    - Impacts cylinder head design
  - Combustion System Design
    - Key element of milestones to Complete cylinder head design and Simulation showing capability to hit efficiency targets
    - High efficiency with minimal tendency for knock

Proposed Future Research

- Combustion CFD to guide decisions on
  - EGR vs No-EGR
  - Combustion system features including compression ratio
- CFD and Conjugate Heat Transfer Analysis
  - Intake and exhaust port design
  - Cylinder head cooling passages to limit surface temperatures, reducing knock risk and limit thermal stresses
  - Exhaust system temperature management
- Engine cycle simulation
  - Valve timing optimization
  - Turbocharger selection and optimization
  - Steady state and transient cycle efficiency predictions

Any proposed future work is subject to change based on funding levels.

Summary

- We are early in the project (Start date Feb 01, 2022), however have a solid technical direction
- We are on plan with all tasks and milestones
- We have high confidence that we will demonstrate performance targets in simulation by the end of Budget Period 1
  - While we have confidence that our current technical path will hit targets, we will consider alternate technologies if new information from analysis lead to a better approach

Q+A

Cummins