DOE Award: DE-EE0009654

Fast Simulation of Real Driving Emissions from Heavy-duty Diesel Vehicle Integrated with Advanced Aftertreatment System

Hailin Li

Principle Recipient: West Virginia University

Sub Recipients: Oak Ridge National Laboratory

Argonne National Laboratory

Gama Technology

Converge Science Inc.

June 21, 2022

This presentation does not contain any proprietary, confidential, or otherwise restricted information

Overview of This Project

- Project Timeline: September 01, 2021 to December 01, 2024.
- Research team:
  - West Virginia University, Prime Recipient
  - Argonne National Lab, subrecipient
  - Oak Ridge National Lab, subrecipient
  - Gamma Technology, subrecipient
  - Convergent Science Inc, subrecipient
- Project Budget: Total budget: $2.5 millions (WVU:1.302,965; GT: $547,034; ORNL: $300,000; ANL: $300,000; CSI: $50,000)
- Barriers: (1) Engine combustion model development; (2) Bureaucracy and Staff Shortage in West Virginia University. WVU has been very slow in processing research grants. This project is still not available in WVU project system on April 29th,2022.

Relevance

This project will develop and validate the simulation tools that enable virtual coupling of engine combustion with aftertreatment (AT) systems. OEMs and research community can use the simulation tools to simulate the real driving emissions from heavy-duty (HD) diesel trucks, further optimizing HD diesel engine and AT systems for near-zero emissions, to develop the pathway to super-low NO_x emissions, and examine technologies to minimize CO_2 emissions. The research work is relevant to DOE's Mission of improving fuel economy, minimizing greenhouse gas emissions.

Technical Approach

- Experimental Research
  - Diesel engine combustion and emissions research;
    - Engine performance, combustion and exhaust emissions
  - Characterization of diesel engine after-treatment system under both steady-state and transient operation;
  - Exhaust emissions from HD diesel trucks operated on road;
  - Examination of aged after-treatment system using TEM and SEM;
- Model Development
  - CFD simulation of HD diesel engine combustion and emissions using Converge CFD model;
    - Provide temperature, pressure, and pollutant distribution in cylinder for engine model development;
  - 1-D simulation of diesel engine combustion and emissions;
  - Adaptive simulation of the after-treatment system;
  - Integration of models into GT-Power
- Integrated Simulation of HD Diesel Engine Integrated with After-treatment System

Technical Approach

Engine Experiment

↓

CFD Model and Validation

↓

1D Engine Model and A daptive AT Model Devel opment and Validation

↓

Integration of ID engine model and AT Model into GT-Suite

↓

GT-Suite Model Validation

↓

HD Vehicle RDE Simulation

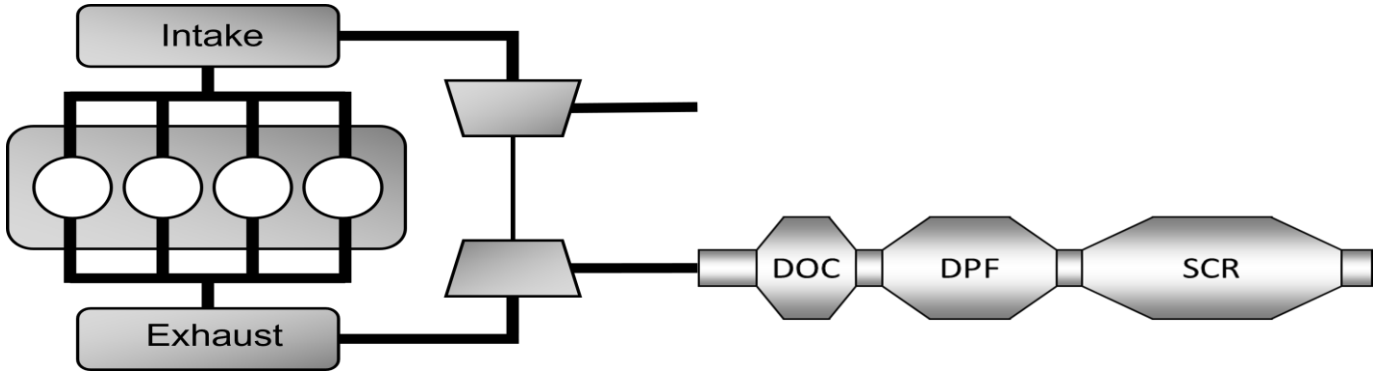

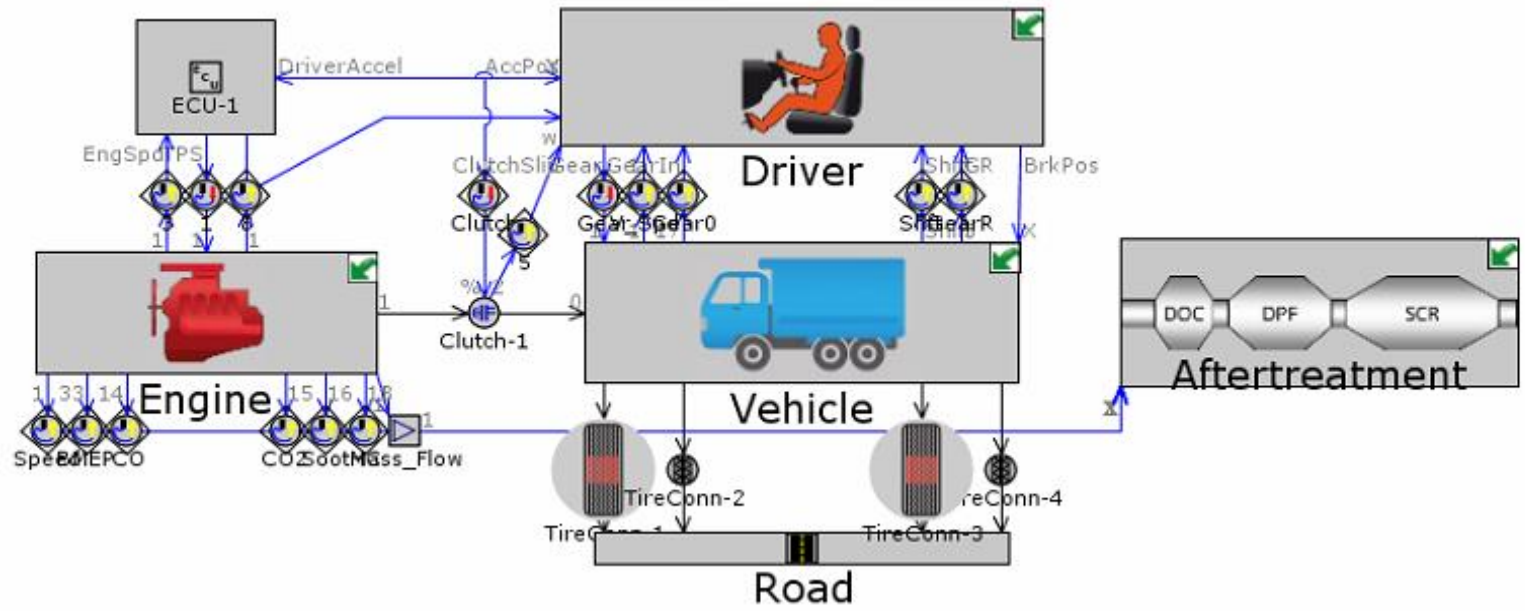

Technical Accomplishments and Progress

- Project kickoff meeting in January 2022.
- Paperwork for this grant is still in process in WVU's Office of Sponsored Program
  - Bureaucracy
  - Staff Shortage
- Research Team has our 1st project meeting with ORNL and GT in March. ANL did not attend the meeting as the subcontract has not been signed yet.
- GT has completed a review of AT system model.
- GT and ORNL is working to develop the AT system model.
- GT is processing the GT-Suite license to WVU and ORNL.
- WVU has developed engine test matrix and learned CFD model.
- WVU is developing 1D engine model.
- WVU is working on GT-Suite model.

Technical Accomplishments and Progress

- GT-Power Model practice

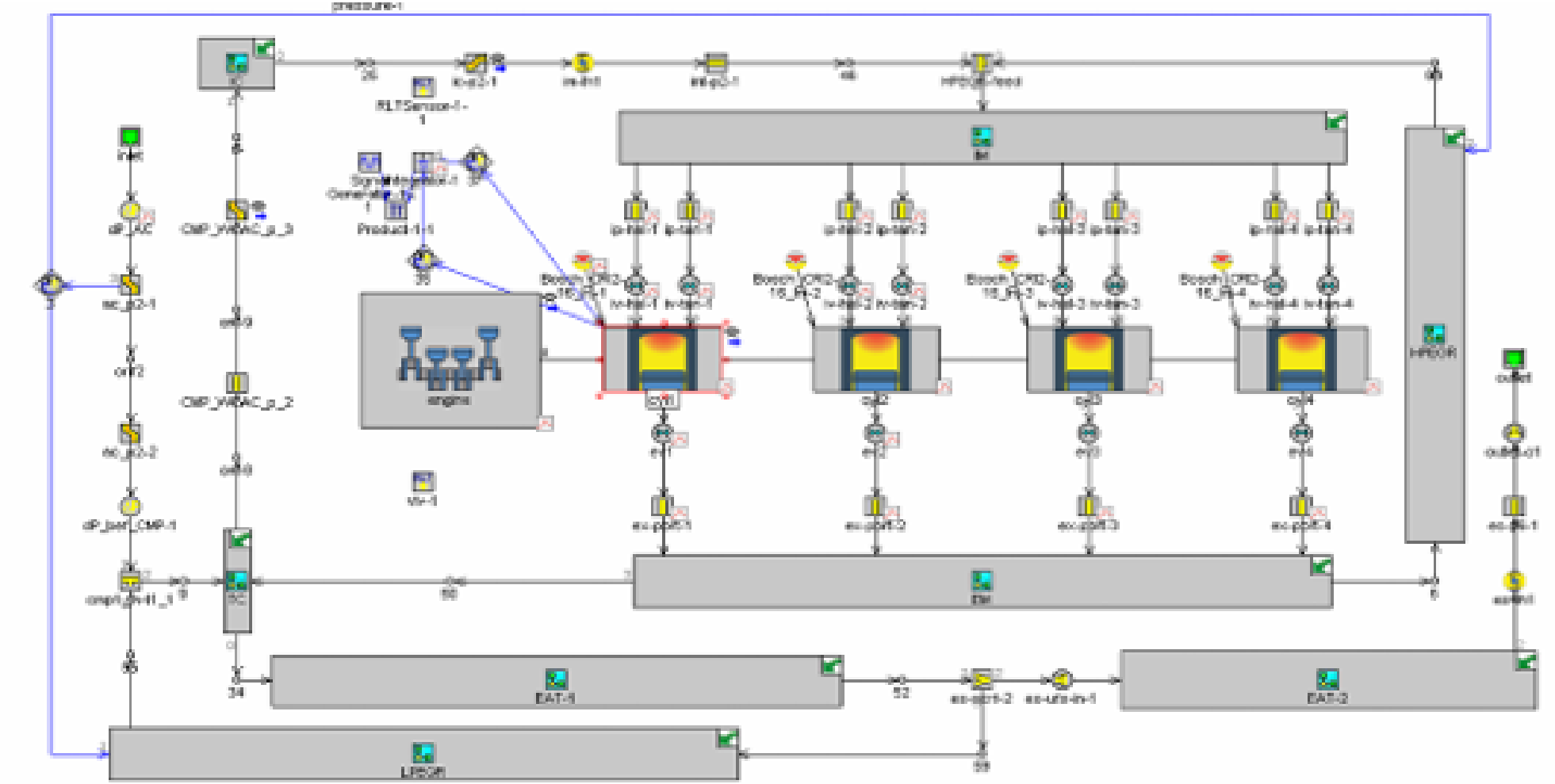

Collaboration with Others

- Argonne National Lab, subrecipient
- Oak Ridge National Lab, subrecipient
- Gamma Technology, subrecipient
- Convergent Science Inc, subrecipient
- Navistar
- Aramco
- National Research Council Canada

Proposed Future Research

- Experimental work
  - Engine performance
  - Combustion process
  - Exhaust Emissions
- CFD Simulation of Diesel Engine Combustion and Emissions;
- 1D Engine Model Development and Validation
- Urea-Injection model development
- Adaptive After-treatment System Model Development

Summary

- The project proposes to develop a simulation tool capable of simulating the real driving emissions from heavy-duty diesel vehicle integrated with advanced aftertreatment system.
- The project is to some extent delayed due to the bureaucracy and staff shortage. The research team is managing to catch up and we are confident that we are going to have the work completed on time.
- The research team is making progress in research project and will gear up to catch up the schedule once the project is processed by WVU's Office of Sponsored Program.

The following slides are backup slides backup slides

Preliminary Results – Entire Engine System Model

- GT-Power provides various engine components.

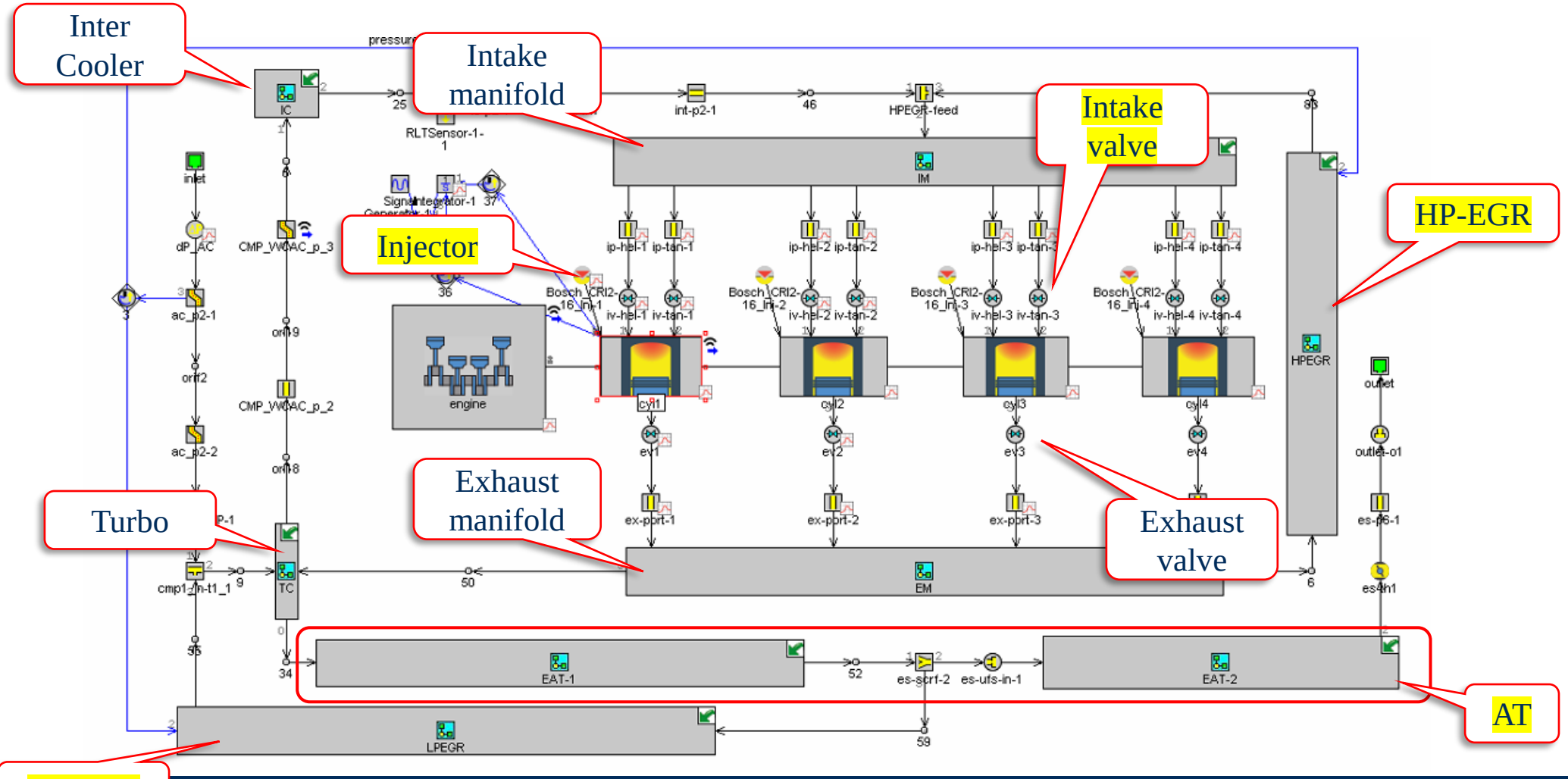

Preliminary Results – Diesel Aftertreatment System Model

- GT-Power offers aftertreatment models.
- Physic and chemistry will be calculated separately but interact each other.

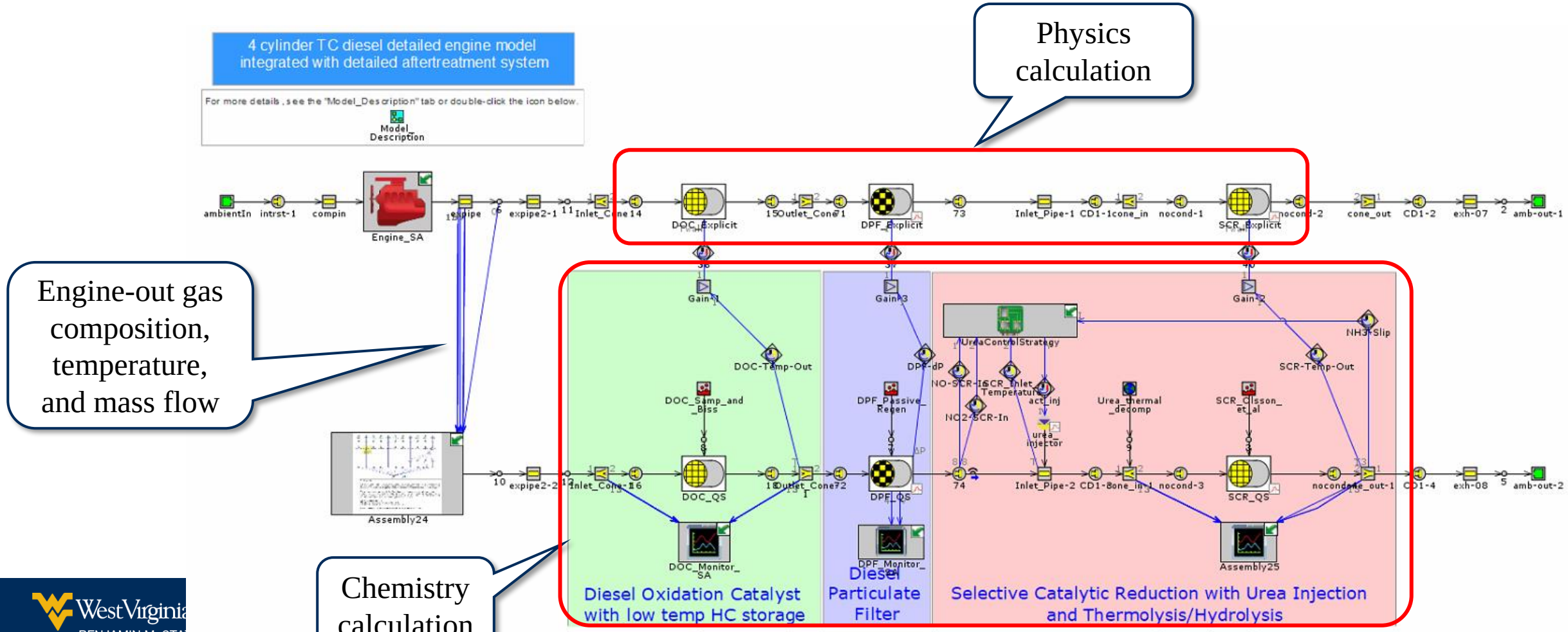

Schedule, Milestones, and GNGs

- Schedule: 39 months since project contract signed;
- There are 13 milestones
- There are 2 Go/No Go Decisions

Milestones M1 to M5 in 15 Months

Task	Task/Subtask Title	Milestone Or GNG	Milestone Description (Go/No-Go Criteria)	M	Q
1			Presentation of the initial PMP at kickoff meeting.	1	1
2.1	Instrumentation of engine	M1	Completion of engine instrumentation and installation.	3	1
2,2	Steady-state engine performance data	M2	Completion of steady-state engine operation data collection;	6	2
3.1	AT system CFD simulation	M3	Completion of the AT system CFD simulation;	8	3
3.3	3D AT model development	M4	Completion of 3D AT component model development;	12	4
4.2	1D engine mode development	M5	Completion of 1d engine model development	15	5
		GNG1	Completion of 1D engine and 3D AT system component model;	15	5

WestVirginiaUniversity
BENJAMIN M. STATLER COLLEGE OF
ENGINEERING AND MINERAL RESOURCES

Milestones M6 to M9 in 16 to 27 Months

Task	Task/Subtask Title	Milestone Or GNG	Milestone Description (Go/No-Go Criteria)	M	Q
5.1	1D engine model validation	M6	Completion of 1D engine model validation;	17	6
5.3	Integration of models with GT-Power	M7	Completion of the integration of component model into GT power;	21	7
6.2	Efficiency of the aged AT system	M8	Completion of aged AT system evaluation;	24	8
7	Diesel engine 0ptmization	M9	Completion of diesel engine optimization;	27	9
		GNG2	Completion of model integration with GT and aged AT system evaluation.	27	9

WestVirginiaUniversity
BENJAMIN M. STATLER COLLEGE OF
ENGINEERING AND MINERAL RESOURCES

Expected Outcomes

- After the completion of this project, the researchers will achieve the following goals:
- (1) the development of models enabling the integrated simulation of engine combustion and AT system. The simulation tool developed can be used to co-optimize the diesel engine and AT system components;
- (2) the simulation of the combustion and exhaust emissions from the HD diesel engine integrated with AT system under transient operation cycle;
- (3) the simulation of real-drive emissions from the HD diesel truck operated on-road;
- (4) development of pathways achieving near-zero NOx emissions form HD diesel engine and trucks.

Issues and Challenges

- 1-D engine simulation model
  - Model development aided by detailed CFD simulation result;
    - The simulation of multi-pulse fuel injection process using 1-D model could be challenging.
  - Model validation against experimental data;
  - Model integration with GT-Power and its application in simulating transient operation case;

WestVirginiaUniversity
BENJAMIN M. STATLER COLLEGE OF
ENGINEERING AND MINERAL RESOURCES

Issues and Challenges

- Adaptive simulation of AT system
  - An algorithm enabling the adaptive simulation needs be developed;
  - Integration of the algorithm developed into GT-Power could be challenging;

Issues and Challenges

- Real driving emissions from HD vehicles
  - Engine and vehicle controller is needed for vehicle system simulation;
  - Navistar will provide support in access to engine and vehicle controller;

WestVirginiaUniversity
BENJAMIN M. STATLER COLLEGE OF
ENGINEERING AND MINERAL RESOURCES

Issues and Challenges

- Exploration of Machine Learning (ML) based framework for adaptive AT system simulation and real drive emissions from HD trucks.
  - This is a new research area proposed in this proposal. WVU, ANL, ORNL, and GT will work together in exploring the potential application of ML in optimizing the simulation of after-treatment system;
  - The process of real vehicle operation data collected in vehicle testing and on-road operation may help the team to derive the data needed in this subtask;