Dynamic Skip Fire (DSF) on a Heavy-Duty(HD) Natural Gas(NG) Engine

Project ID: ace186

Jay Shah, Cummins Inc.

June 23, 2022

2022 DOE Vehicle Technologies Office Annual Merit Review

This presentation does not contain any proprietary, confidential, or otherwise restricted information

Overview

Timeline

- Start Date: May 5, 2021
- End Date: July 31, 2024
- Percent complete : 15%

Budget

- Total project funding : $5,982,508
- DOE share : $3,750,000
- Cummins share : $2,232,508
- Total Funding for Budget Period#1 05/01/2021 - 07/31/2022 : $1,589,497

Partners

- Tula Technologies, Inc

Barriers

- The current state-of-the-art HD NG engines have a sharp rise in Brake Specific CO2 (BSCO2) emissions as the average power of the duty cycle is decreased as shown in figure due to the inherent efficiency losses at part load.
- Standard cylinder deactivation (CDA) solutions can partly improve low load efficiencies by deactivating a fixed number of cylinders but are severely limited in their applicability over a wide speed/load range.

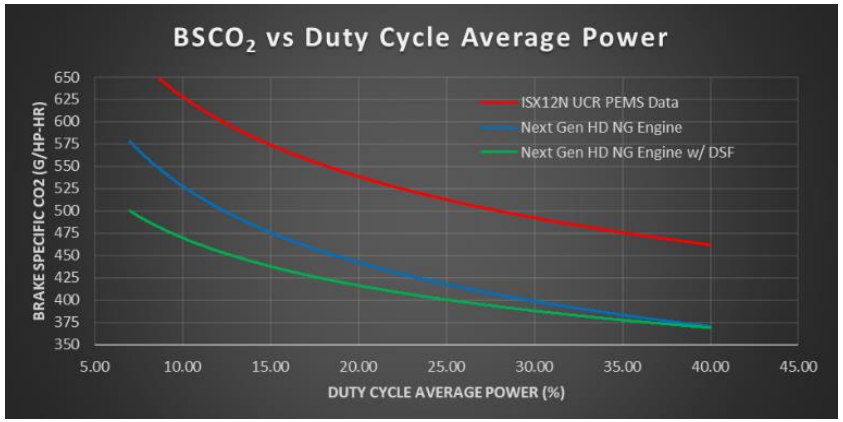

Relevance & Objective

- Relevance
  - To meet DOE VTO Advanced Engine & Fuel Technologies 2025 goal of improving HD engine efficiency by 35% relative to a 2009 baseline vehicle, while meeting prevailing U.S. Environmental Protection Agency emissions standards.
  - Increase fuel economy of low loaded drive cycles typically seen on Class 7-8 vocational trucks which have considerable inefficient idle time and low average loads.
  - DSF provides flexibility over standard CDA solutions to dynamically deactivate any of the engine cylinders without compromising on Noise, Vibration and Harshness(NVH) targets.
  - Demonstration of a path to <400 g/hp-hr CO2 emissions on vocational and tractor certification cycles while maintaining capability to meet near-zero NOx emissions.
- Objectives
  - Cylinder deactivation and valvetrain component development and validation on a HD NG engine.
  - Control system development for DSF on a HD NG engine with cooled EGR.
  - Design and develop DSF technology for HD NG engine to demonstrate a 6-12% improvement in BSCO2 emissions on low loaded cycles while maintaining capability to meet 0.02 g/hp-hr NOx emissions.

Milestones

Budget Period 1 (05/01/21-07/31/22)

System Design and Analysis

- [x] Project Kick-off
- [x] Overhead Design Complete
- [ ] Initial Engine Control Architecture Defined
- [ ] CDA Hardware Design Complete
- [ ] **Go/No-Go: CDA Hardware and Control System Architecture Defined**

Budget Period 2 (08/01/22-07/31/23)

Hardware Manufacturing, Rig Validation and Dyno Testing

- [ ] First spin of rig hardware complete
- [ ] Software bench test complete
- [ ] Initial DSF engine map completed
- [ ] CDA Hardware Robustness Demonstrated with Bench Test
- [ ] **Go/No-Go: Engine Operation Demonstrated with DSF**

Budget Period 3 (08/01/23-07/31/24)

Vehicle Integration and Final Demonstration

- [ ] Drive Cycle Testing Complete
- [ ] Chassis Dyno Testing Complete
- [ ] Efficiency targets demonstrated

Approach

1. Cummins-Tula team to build on the Cummins next-generation HD NG engine being developed by Cummins. Development of this engine is jointly funded by the Natural Gas Vehicles Consortium under Subcontract #NHQ-9-82305-03, administered by the National Renewable Energy Laboratory.
2. Analysis and limited component testing will be conducted to establish the detailed component design and fractional firing strategies for the engine.
3. Engine and aftertreatment controls will be developed to ensure proper integration of DSF algorithms.
4. Selected Hardware and Software will be validated on a rig.
5. A multicylinder engine with DSF will be built for engine and aftertreatment testing, calibration and certification.
6. Finally, the calibrated engine and controller will be installed in vehicle for NVH and real-world fuel economy, performance and emissions evaluation.

Technical Accomplishments

Task 1.1 Valvetrain Design

- Engine cylinder head and overhead components design is completed to accommodate an advanced valvetrain that includes all the required components for CDA, Variable Valve timing (VVT) and Compression Release Engine Brakes (CREB) functionality.
- A Type II valvetrain was selected due to the impact of utilizing angled valves for the tumble combustion system and a DOHC camshaft arrangement.
- Two stroke braking technology is being developed to improve the relative braking performance.
- An advanced rocker assembly technology has been selected with selectable input rocker arms to obtain cylinder deactivation and two-stroke braking.
- Two brake cam lobes and rocker arms were designed to share the braking loads and avoid offsetting load transfer.
- Standard, CDA and two-stroke modes are switched hydraulically with Oil Control Valves(OCV's).
- OCV's are housed in the intake manifold. Oil circuits in the cylinder head connect the oil from the OCV's to the rocker arms.
- Movable latch pins in the advanced rocker system enables to switch between different modes.

Technical Accomplishments

Task 1.2 DSF Simulation

- Simulation studies show DSF operation to about 5 bar BMEP with up to 40% fuel benefit.

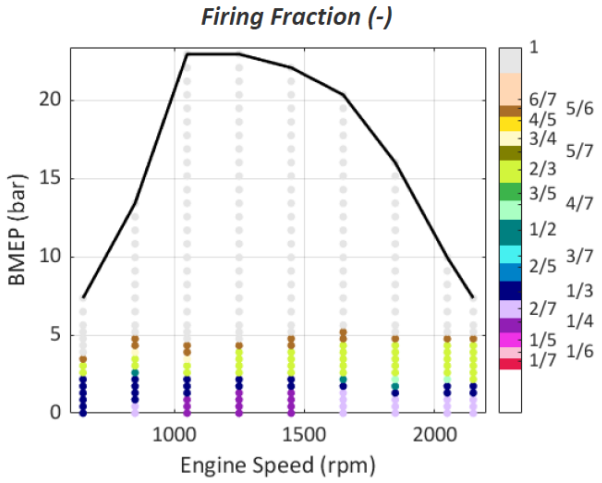

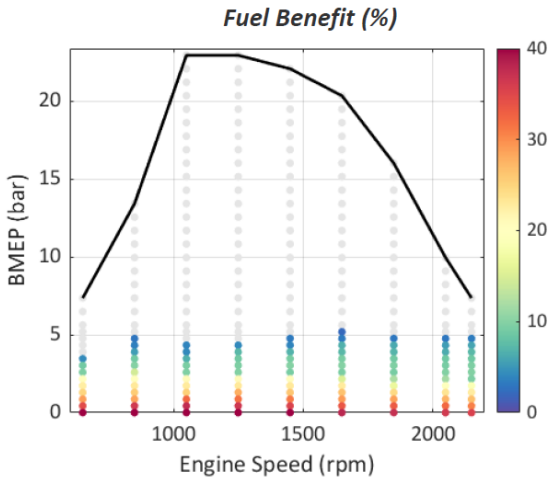

- Simulations were also ran to predict CO2 benefits on the Heavy-Duty FTP & RMC cycles and the Chassis low load cycle(LLC) & Drayage cycles.

ΔCO2 vs Baseline	HD FTP	HD RMC	Chassis LLC	Chassis Drayage
DSF, with NVH Limits, with DCCO	-4%	-0.7%	-14.9%	-11.3%

Technical Accomplishments

Task 1.3 Controls Systems

- Schematic of controls architecture with interaction between base controls and DSF has been generated.
- At a minimum, base controls for fresh air estimation, EGR estimation, Air-Fuel ratio, Spark Timing, friction & pumping loss estimations will be affected by DSF and may need further modifications.

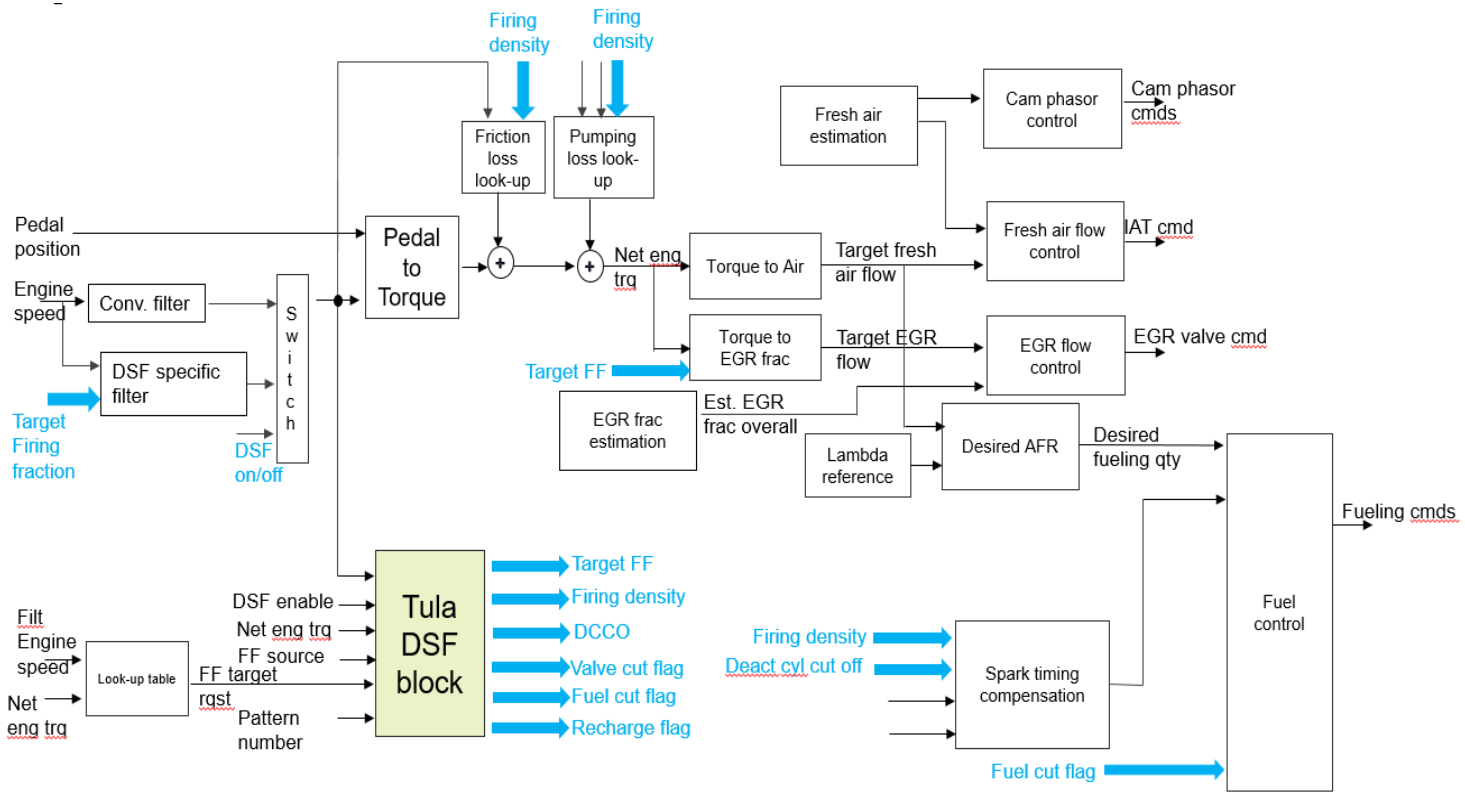

Technical Accomplishments

Task 1.3 Controls Systems(Continued)

- Standalone DSF code testing was completed.
- Testing was extended to HD transient FTP cycle – Firing fraction(FF) across the cycle shows expected behavior with low/idle operating conditions at lower magnitudes of firing fraction desirable for fuel efficiency.

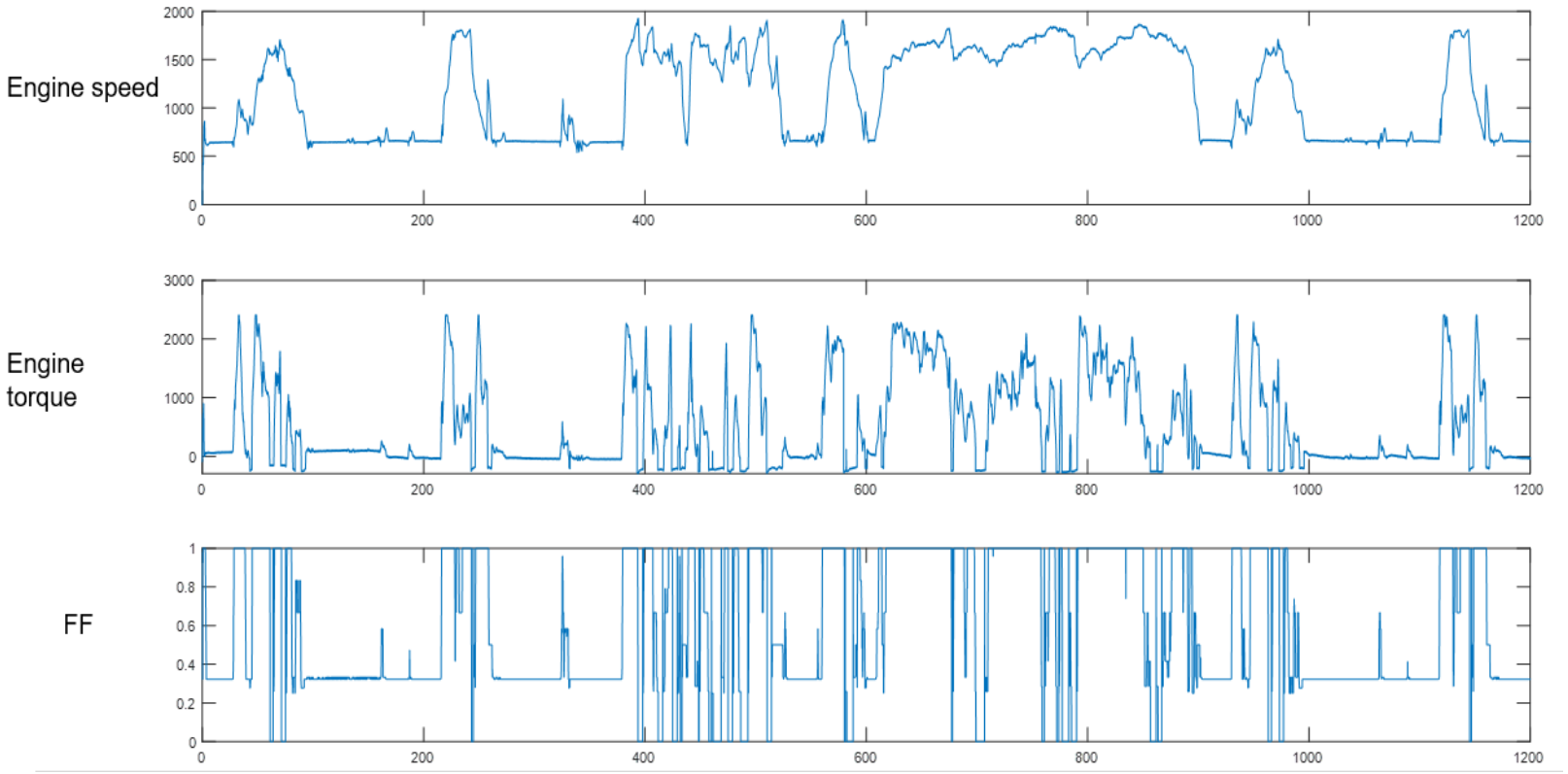

Technical Accomplishments

Task 1.3 Controls Systems(Continued)

- Electronic hardware bench setup interface layout has been completed.
- Base controls logic (non-DSF) to reside in Cummins ECM. It will drive the Air Handling actuators.
- DSF code and interactions with base controls logic to reside in SpeedGoat.
- The LECM modules will drive the 12 PFI injectors.
- The cRIO box will be used to drive the 6 CDA solenoids.

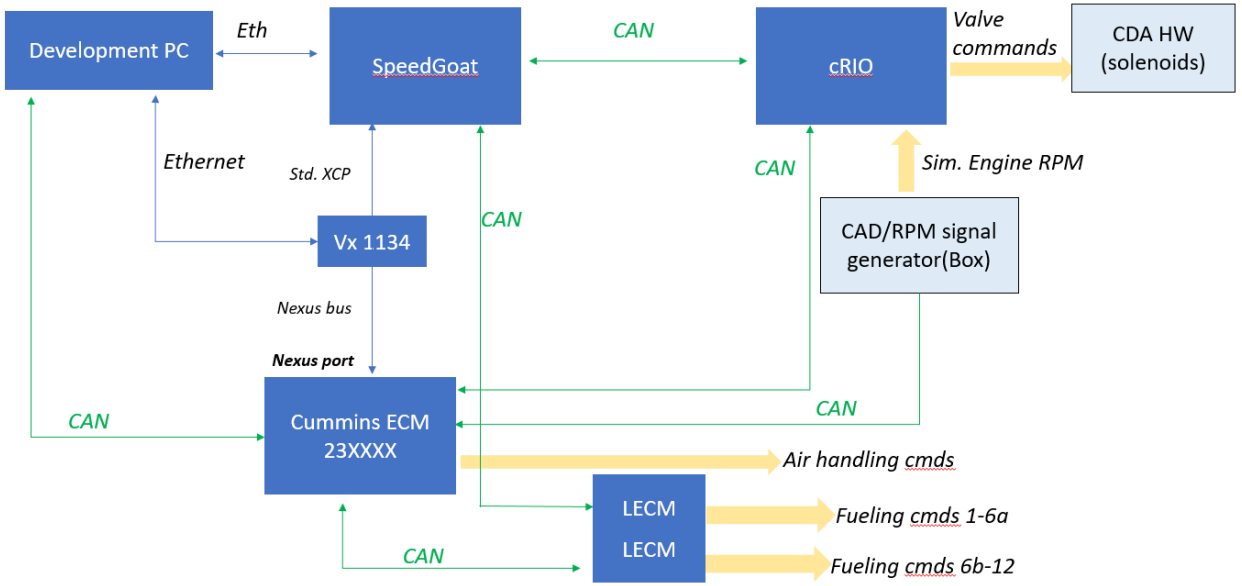

Technical Accomplishments

Task 1.4 CDA Hardware Design

- A Creo Mechanism model has been created to complete the following dynamic motion analysis for all three valvetrain modes (Standard Lift, Two-Stroke brake, CDA) :
  - Develop “motion envelope” models for checking clearance against neighboring components.
  - Track bias spring compression and extension.
  - Show dynamic movement between rockers.
  - Display valve lift for all valvetrain modes.
  - Verify valve-to-piston contact.
- Singular Cylinder exhaust and intake valves is being used.

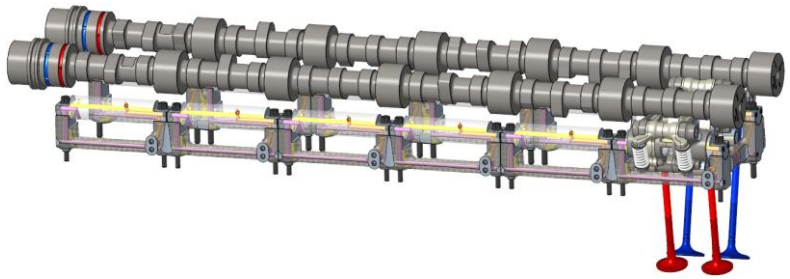

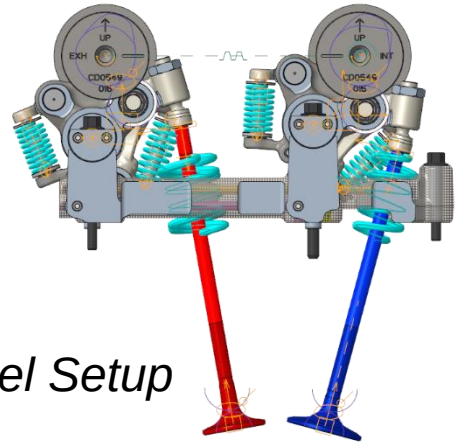

Creo Mechanism Model Setup

Technical Accomplishments

Task 1.4 CDA Hardware Design

- Initial results on the fatigue analysis are indicating that the rocker arm can withstand significant loading from engine braking. Colored areas in the image below are above the fatigue limit. Design changes are being made to mitigate this.

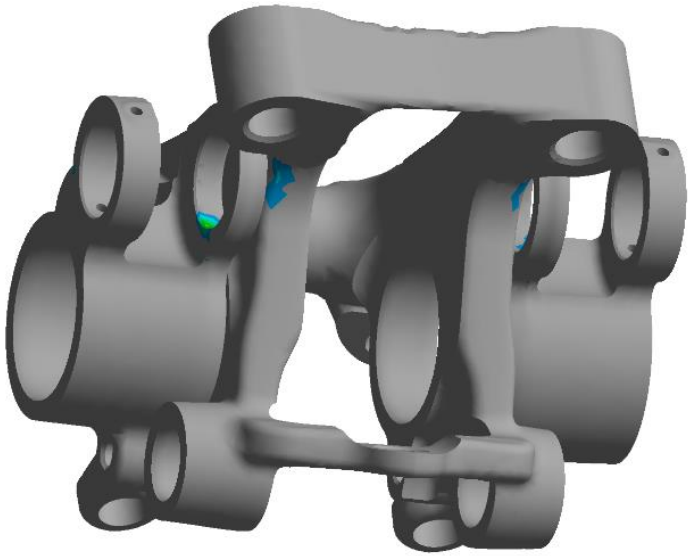

- Initial results of the lube system performance are encouraging as the oil pressure at the rocker shaft is predicted to be approximately 150 kPa. The CDA pin mechanism is being designed to switch at pressures as low as 100 kPa, so the lube system appears to have some margin to enable the advanced valvetrain.

Responses to Previous Year Reviewers' Comments

- This is the first year that the project has been reviewed.

Collaboration and Coordination with Other Institutions

TULA

Project partner – DSF Controls integration, Simulation, Engine Testing & Data analysis support

NREL
NATIONAL RENEWABLE ENERGY LABORATORY

Base High Efficiency HD NG Engine Development, Sub-contract# NHQ-9-82305-03

Remaining Challenges and Barriers

- **Trapping strategy**
  - Sealing Capability/Reverse blow by with Low in cylinder pressure – vacuum condition (2-5kpa) with Low Pressure Exhaust Spring(LPES).
- **CDA hardware functionality/robustness**
  - Mode switching Capability and lost motion robustness.
  - Able to Deactivate/Reactivate in conjunction with Controls.
  - Braking Power capability with 2 stroke braking.
- **Controls – DSF**
  - Speed goat software integration.
  - Controls response and optimized FF feedback to Engine.
  - Engine controls - Precise A/F control, AT Controls, EGR Control, Engine load control.
- **Lube system Capability**
  - Ability to Lock/unlock, deliver required pressure needed in dual mode operation.
- **Vehicle Integration**
  - NVH**.**
  - Powertrain/Transmission Controls integration.
  - Packaging.
- **Maintaining Low NOx with DSF**

Proposed Future Research FY22-23

- Controls Integration
  - GT-Simulink co-simulation model studies.
  - **Initial engine controls architecture defined.**
  - Controls impacted functions development.
  - Rapid prototype software integration.
  - **Electronic hardware/software bench testing.**
- **CDA Hardware Design**
  - Fatigue analysis of rocker assembly.
  - Design of switching mechanism components.
  - Lube system and valvetrain system analyses to predict CDA activation/deactivation timing.
  - Cam profile designs and dynamic system analysis.
  - Engineering drawings for all CDA hardware components.
- **CDA Hardware and Control System Architecture Defined – Go/No Go.**
- Multi-cylinder Engine Build.
- **Rig test/Hardware Spin.**
- **CDA Hardware Robustness Demonstrated with Bench Test.**
- Initial vehicle integration.
- **Engine Operation Demonstrated with DSF – Go/No Go.**

Any proposed future work is subject to change based on funding levels.

Summary

- DSF technology on HD NG engines enables further utilization of the inherent low carbon intensity of natural gas thereby further reducing the carbon footprint.
- Milestone – Overhead Design is completed.
- Modeling is predicting fuel economy benefits with DSF as expected.
  - Up to 15% on low load cycle.
- Plan to complete controls/software integration and hardware design in 2022.
- Plan to conduct bench and engine testing in 2023.
- Project will need an extension of about 3 months for the current budget period for delays due to foreign national approvals causing resource allocation and scheduling challenges.