Fully Electric Powered, Hydraulic Assisted, Compact Track Loader

PI: Perry Y. Li
University of Minnesota

Project ID: ace182

DOE VTO Annual Merit Review
June 21-23, 2022

This presentation does not contain any proprietary, confidential, or otherwise restricted information

Overview

Timeline

- Project start: 2.1.2022
- Project end: 4.30.2025
- Percent complete: 1%

Budget

- Total project funding: $2,991,289
  - DOE share $ 2,365,364
  - Contractor share $ 625,925
- Funding for FY 2021: $1,087,921
- Funding for FY 2022: $1,032,319

Barriers:

- System efficiency
  - Currently ~20%
- Greenhouse Gas (GHG) emission
- High cost of electrification
  - High power e-motors and battery are expensive

Partners:

- U Minnesota (Lead, ME)
  - Perry Li
- U Wisconsin, Madison (EE)
  - Eric Severson
- OEM: Case New Holland
- Suppliers: Danfoss, Parker-Hannifin

Relevance

- Construction and other off-road vehicles (agriculture, mining, forestry, etc.) use **hydraulics** for their high-power density
- **Efficiency** from engine output to load is only 20%, due to:
  - Throttling control and components inefficient at partial load
- **Electrification** can improve efficiency but costly, bulky for high power – high torque applications (limit ~20kW)

Objective: Demonstrate a fully electric powered functional Compact Track Loader (CTL) using a highly efficient **Hybrid Hydraulic-Electric Architecture (HHEA)**.

- Target is to reduce electricity (battery) usage by 40% compared to standard electrification approach of replacing diesel engine with an e-motor
- GHG footprint reduction by 80% if for 50% green grid

Approach - Hybrid Hydraulic-Electric Architecture* (HHEA)

- Multiple common pressure rails transmit majority of power hydraulically
- Small electric motors modulate hydraulic power and control speeds

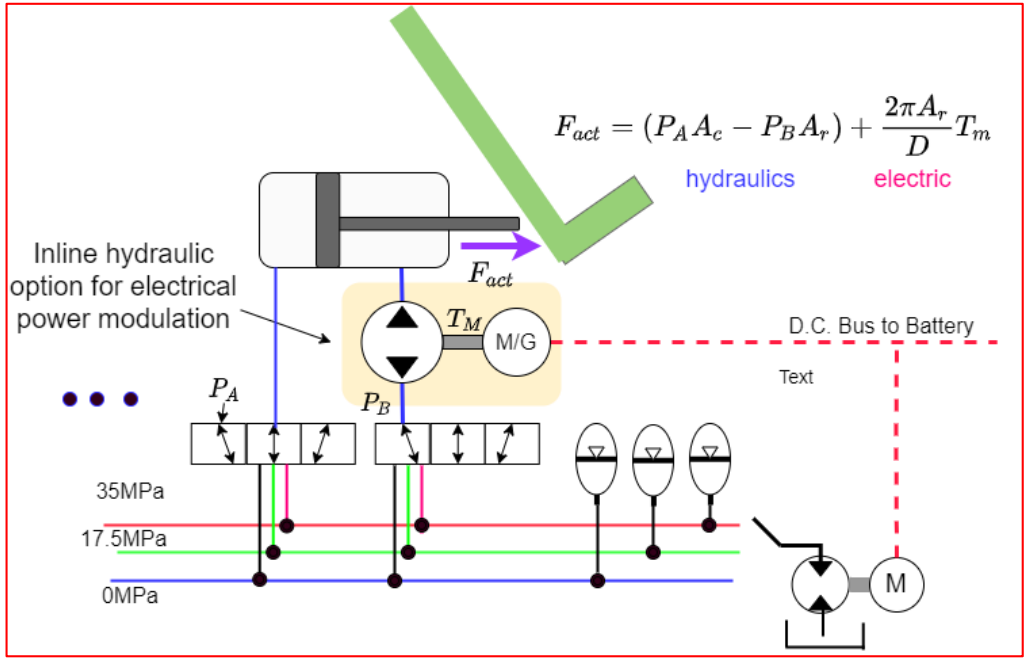

EE-0008384: Studied HHEA for work circuits:

- Saves 50-80% of input energy
- Greatly downsized e-motor c.f. w/ EHA

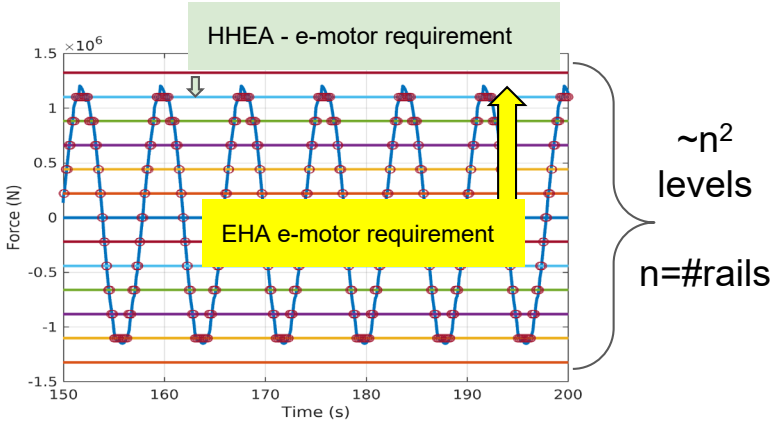

*US Patent: 11,060,539 (7/ 2021)

Approach: Demo M/C Architecture

Demonstrate a suite of technology modules using COTS components

- OEMs can pick and choose modules for specific machine

Examples:

- Downsized diesel vs battery
- HHEA for a few circuits only
- No e-assist for some circuits

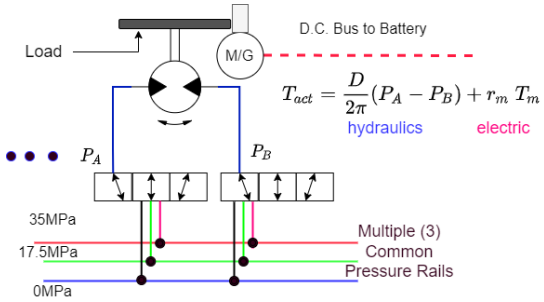

HHEA for Propel Circuit

Propel Left

Battery e-Motor

Pressure rail filling pump/motor

Hybrid Hydraulic-Electric Architecture (HHEA)

- Multiple Common Pressure Rails (CPRs)
- Small electric force/torque modulation

Work Circuit

Propel Right

Downsized for mean power

Combines 3 P/Ms in current machine into 1

Approach : New research

1. Implement and validate HHEA on actual machine
   - TV370-B Compact track loader
   - Utilize mainly commercially off-the-shelf components
   - Investigate alternate schemes to achieve electric modulation

   ⇒ TRL 6

2. Apply HHEA to work circuit and propel circuit (new)
3. Human driver ⇒ duty cycle unknown beforehand ⇒ new control system
4. Replace diesel engine with electric motor and battery
5. Develop integrated electro-hydraulic “soft-switch” for achieve fast and efficient pressure rail switching
6. Life-cycle GHG analysis

Technical Accomplishments & Progress

- Project has just been initiated (contract completed in March 2022)
- Held kick-off meeting with DOE and collaborators (March 15, 2022)
- Project Management Plan submitted (April 21, 2022)
- Project being kicked off as team is being formed

Current Budget Period:

BP1 (2.2022-4.2023)**: System Design/Testbeds**

- Baseline machine testing
- Hardware-in-the-loop work circuit and propel circuit testbeds development
- Optimize system architecture
- Select concepts for soft pressure rail switching valves

Partners/Collaborators

University of Minnesota	**Lead PI institution. Responsible for system level modeling and architecture optimization; control system development; demonstration machine.**
The University of Wisconsin Madison	**Co-PI institution. Responsible for electric aspects of project, include system modeling and design of the electric system of the architecture, and electromagnetic actuation of soft-switch valves.**
CNH Industrial	**OEM manufacturer. Responsible for vehicle system and duty cycle requirements, advice on testing/evaluation, voice of the customer.**
Danfoss Parker	**Hydraulic and Electric components suppliers. Responsible for providing support to hydraulic and electric components, advice on industry practice, design reviews.**

Proposed Future Research

BP1 (2.2022-4.2023)**: System Design/Testbeds**

- Baseline machine testing
- Work circuit and propel circuit testbeds development
- Optimize system architecture
- Concepts for soft pressure rail switching valves

Current BP

BP2 (5.2023-4.2024): **Control design and Prototyping**

- Develop control for work, propel and rail filling circuits and validate on testbeds
- Detailed simulation of machine
- Implement system architecture on actual machine
- Prototype and test soft pressure rail switching valve concept

BP3 (5.2023-4.2024): **Final testing and evaluation**

- Implement control of demonstration machine
- Test and evaluate performance of demonstration machine
- Life cycle GHG analysis

Any proposed future work is subject to change based on funding levels

Summary

Relevance:

- Off-road vehicles require hydraulics to provide high power but are inefficient
- Electrification is challenging due to cost of high power/torque electric machines
- Proposed architecture blends hydraulic and electric actuations to provide for significantly improved efficiency; improved control performance; while minimizing need for high power electric machines.

Accomplishments / future work

- Project at initial phase
- Year 1 will optimize system architecture for demo system, develop testbeds for control development, and select soft switch valving concept for prototyping

Technical Backup Slides

Energy saving and GHG emission estimates

- For work circuit, HHEA has been shown in previous study (DE-0008384) to reduce energy consumption by 50-80%
- For propel circuit, the HHEA is a hybrid circuit. Hybridizing propel circuit can save 10-30% energy from prior study (DE-0008335).
- Assuming 50:50 work circuit and propel circuit energy outputs:
  - 50-80% energy saving for work circuit
  - 10-30% energy saving for propel circuit

  ⇒ 30-55% energy saving (from engine output) or battery size (cost and GHG footprint) if electrified
- Eliminating engine (eff=25%) and assuming 50% of electricity is non-green obtained with 33% efficiency ⇒ GHG reduced by 80%

BP1 Milestones:

Milestone	Type	Description
Optimal energy-saving analysis tool operational	Technical	Computer code reconfigured for validation machine
Soft-switch valve concepts down selected	Technical	Concepts for further study through analysis have been selected
Baseline machine model complete	Technical	Baseline machine model updated using performance data
Design for validation machine complete	Technical	Architecture and sizing decided, and performance prediction obtained
Validation machine design meets energy saving goal	Go/No Go	Prediction of energy saving potential of the chosen design meets the ≥40% electricity saving target.

BP2 Milestones

Milestone	Type	Description
Detailed model of proposed system complete	Technical	A detailed simulation of the proposed system predicts the energy saving potential
Multiphysics simulation of high-speed soft-switch valve complete	Technical	Multiphysics simulation verifies high-speed soft-switch valve characteristics
Hardware installed	Technical	Proposed architecture is physically installed on demonstration machine
Validation machine commissioned	Technical	Hydraulic, electric, and mechanical systems on demo machine are operational
Energy saving target and control functionality	Go/No Go	Detailed simulations meet the ≥40% electricity saving target; control performance on testbeds comparable to unmodified machine in terms of accuracy and responsiveness.

BP3 Milestones

Milestone	Type	Description
Test plan created	Technical	The test plan for the validation machine is created
Motion control tested on validation machine	Technical	Motion control functionality is shown on the validation machine
GHG emission study complete	Technical	The life-cycle GHG emission is evaluated
Validation	Technical	Target electricity saving of ≥40% is exhibited on the validation machine. GHG reduction target achieved.